CITY OF CHICOPEE
ENGINEERING DEPARTMENT
NEW LOMBARD ROAD RECONSTRUCTION ~ 2020

JOHN L. VIEAU
MAYOR

ELIZABETTE F. BOTELHO, P.E.
D.P.W. SUPERINTENDENT

DOUGLAS E. ELLIS, P.E.
CITY ENGINEER

TABLE OF CONTENTS

SHEET	TITLE
NL-1	ROAD RECONSTRUCTION
NL-2	ROAD RECONSTRUCTION
NL-3	ROAD RECONSTRUCTION
NL-4	GRADING AND SURFACE PROFILE
NL-5	GRADING AND SURFACE PROFILE
NL-6	GRADING AND SURFACE PROFILE
NL-7	GRADING AND SURFACE PROFILE
NL-8	GRADING AND SURFACE PROFILE
D-1	CONSTRUCTION DETAILS
D-2	CONSTRUCTION DETAILS AND TYPICAL CROSS-SECTION
NL-TR	TRAFFIC CONTROL PLAN

PREPARED BY:
CITY OF CHICOPEE
ENGINEERING DEPARTMENT

SEPTEMBER ~ 2020

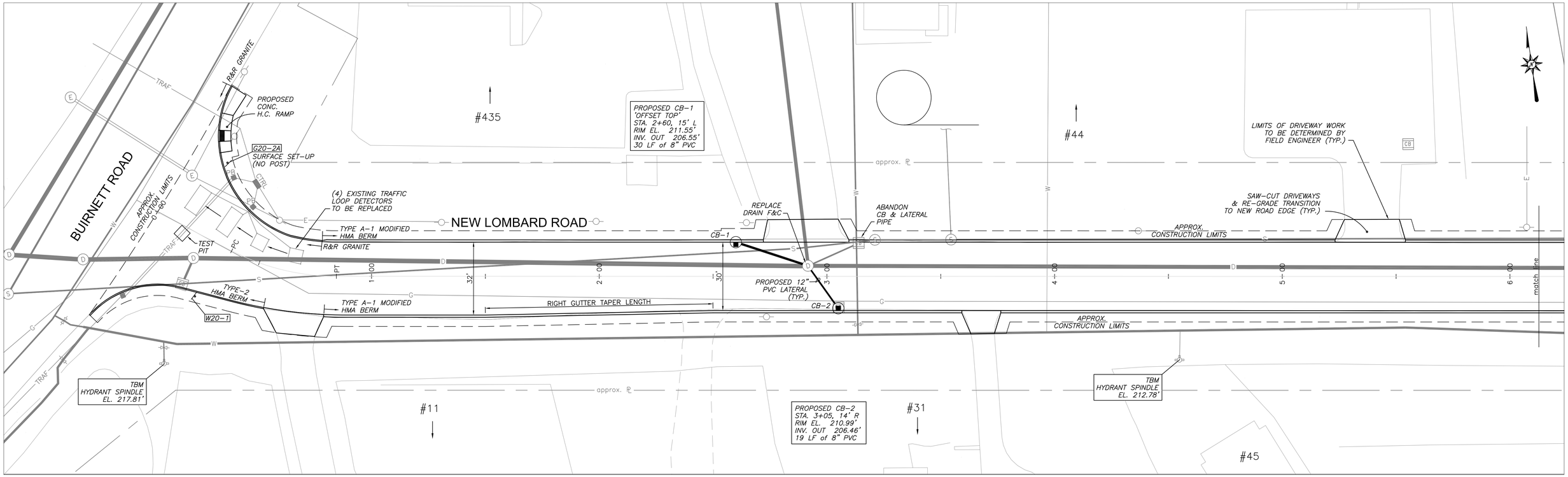

STA. 0+00 to 6+00

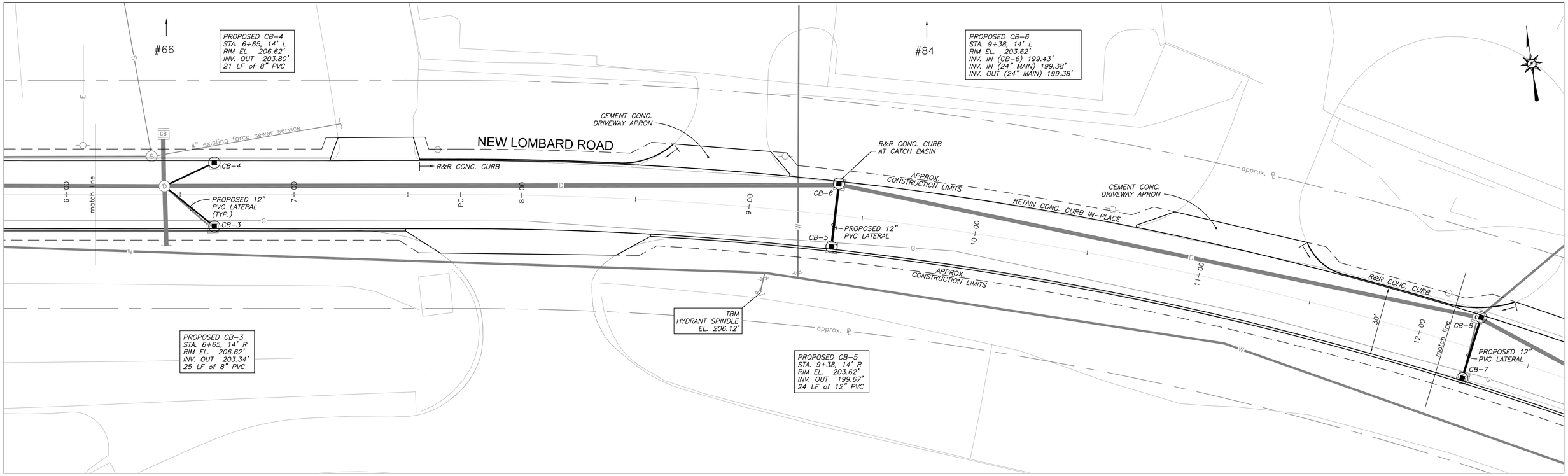

STA. 6+00 to 12+50

NEW LOMBARD ROAD RECONSTRUCTION PLAN

CITY OF CHICOPEE ENGINEERING DEPARTMENT
115 BASKIN DRIVE
CHICOPEE, MASSACHUSETTS 01020
(413) 594-3416

DRAWN BY: CJC CHECKED BY: APPROVED BY:	DATE: SEPTEMBER, 2020 SCALE: 1" = 20'	DRAWING NUMBER NL-1

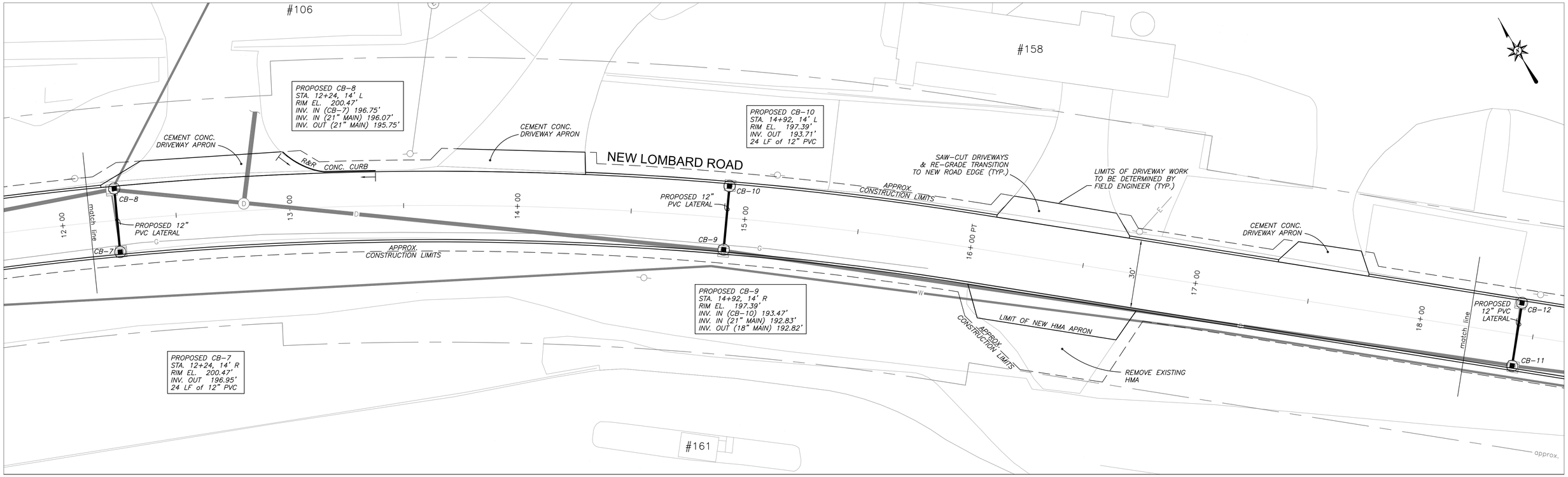

STA. 12+00 to 18+50

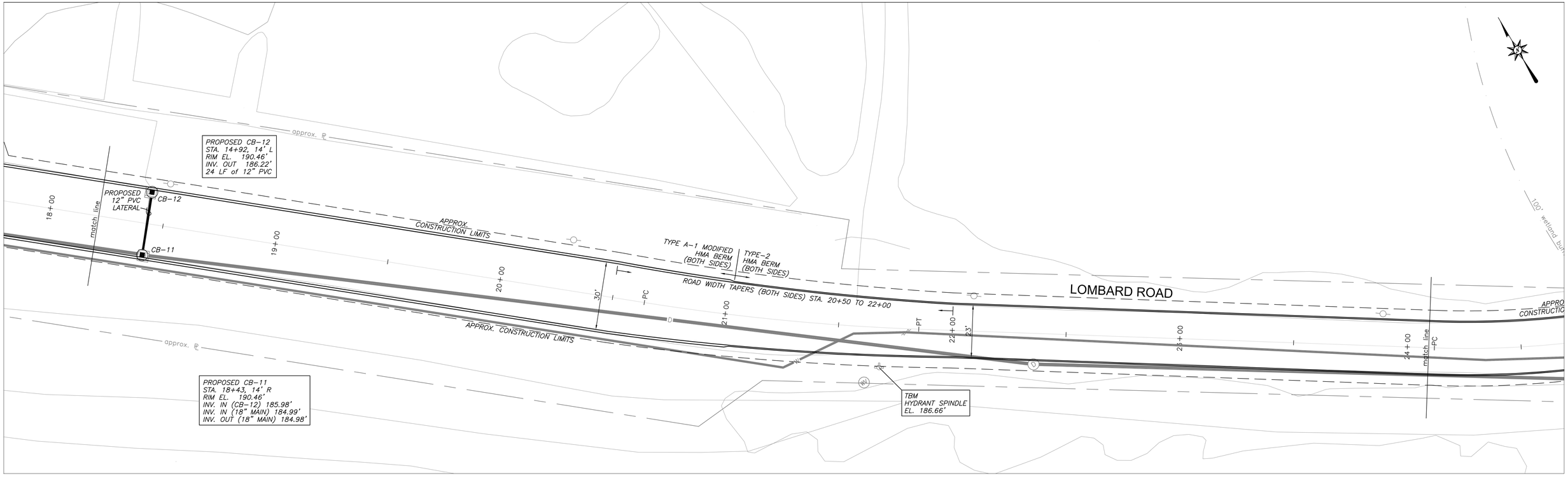

STA. 18+00 to 24+50

NEW LOMBARD ROAD RECONSTRUCTION PLAN

CITY OF CHICOPEE ENGINEERING DEPARTMENT
115 BASKIN DRIVE
CHICOPEE, MASSACHUSETTS 01020
(413) 594-3416

DRAWN BY: CJC CHECKED BY: APPROVED BY:	DATE: SEPTEMBER, 2020 SCALE: 1" = 20'	DRAWING NUMBER NL-2

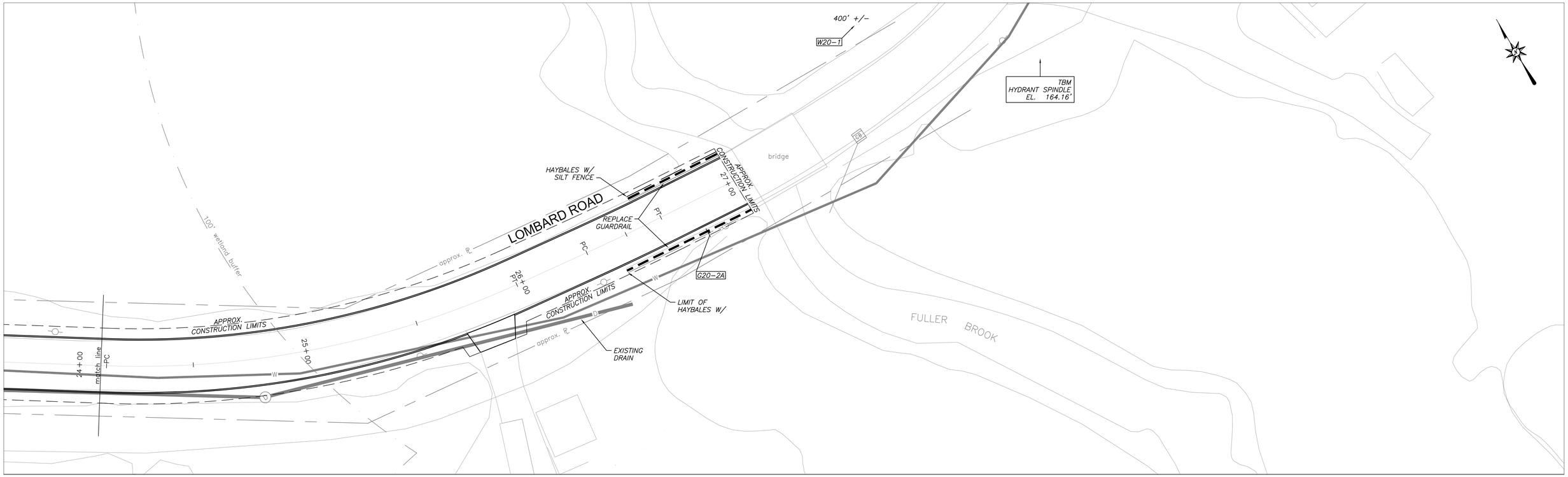

STA. 24+00 to 27+02

GENERAL CONSTRUCTION NOTES:

1. THE RECONSTRUCTION OF NEW LOMBARD ROAD SHALL BE FULL-DEPTH RECONSTRUCTION. SEE THE SPECIAL PROVISIONS SHEET SP-5.
2. THE PAVEMENT CROSS-SECTION FOR NEW LOMBARD ROAD SHALL BE (1) 4" THICK COURSE OF HMA BASE, (1) 2" THICK COURSE OF BINDER (3/4"), AND (1) 2" THICK (1/2" MODIFIED) TOP COURSE FOR A TOTAL OF 8" HMA THICKNESS OVER THE GRADED AND COMPACTED GRAVEL BASE (See Detail Sheets for cross-section).
3. ROADWAY CONSTRUCTION BASELINE RUNS ALONG PROPOSED ROAD CENTERLINE.
4. ALL GRADES REPRESENTED ARE FINISHED TOP COURSE GRADES.
5. ALL DRIVEWAY APRONS SHALL BE REPLACED IN KIND OR AS NOTED ON THE PLAN SHEETS.
6. PROPOSED HMA DRIVEWAY APRON CROSS-SECTION SHALL BE (1) 1-1/2" DENSE BINDER COURSE (AS A BASE) AND (1) 1-1/2" TOP COURSE FOR A TOTAL OF 3" HMA THICKNESS OVER 8" OF PROCESSED GRAVEL.
7. PROPOSED CEMENT CONCRETE DRIVEWAY APRON CROSS-SECTION SHALL BE 8" OF CONCRETE OVER 10" OF PROCESSED GRAVEL. DUE TO THE COMMERCIAL NATURE OF MANY OF THE DRIVEWAYS ON NEW LOMBARD ROAD, THE CONTRACTOR SHALL ARRANGE THE WORK WITH EACH BUSINESS PROPERTY AND MAKE PREPARATIONS TO INSTALL THE CEMENT CONCRETE APRONS SEPARATELY IN INDIVIDUAL SECTIONS.
8. PROPOSED GRADES OF NEW CATCH BASIN LATERALS ARE APPROXIMATE AND MAY REQUIRE FIELD ADJUSTMENT DUE TO EXISTING UNDERGROUND UTILITIES.
9. ABANDONMENT OF ANY EXISTING CATCH BASINS (WHERE LABELED) SHALL INCLUDE THE PLUGGING OF ALL ABANDONED LATERAL PIPES W/ BRICK AND MORTAR. COMPACT BACKFILL IN SIX INCH LIFTS.
10. REMOVAL OF ANY EXISTING CATCH BASINS (WHERE LABELED) SHALL INCLUDE THE PLUGGING OF ALL ABANDONED LATERAL PIPES W/ BRICK AND MORTAR. COMPACT BACKFILL IN SIX INCH LIFTS. UTILIZE ITEM 141. CLASS A TRENCH EXCAVATION FOR THE REMOVAL OF THE STRUCTURE.
11. ALL PROPOSED STRUCTURE COVERS AND GRATES SHALL BE BE INSTALLED AT BINDER GRADE. TOP COURSE PAVEMENT (AT THE DISCRETION OF THE OWNER) MAY BE INSTALLED IN THE SPRING OF THE FOLLOWING YEAR AT WHICH TIME THE STRUCTURE COVERS AND GRATES WILL BE ADJUSTED TO FINISHED GRADE.
12. EXISITING SANITARY STRUCTURES SHALL BE RETAINED. FRAMES & COVERS/GRATES TO BE REPLACED AS NOTED.
13. ALL CASTINGS REMOVED SHALL BE DELIVERED TO THE CHICOPEE DPW YARD BY CONTRACTOR.
14. ALL EXISITNG REGULATORY SIGNS SHALL BE REMOVED AND STACKED IF EXISTING LOCATION IS IN CONFLICT WITH CONSTRUCTION PROCEDURES.
15. ROAD STRIPING ON THE HMA TOP COURSE SURFACE SHALL CONSIST OF 6" WIDE DOUBLE YELLOW CENTERLINES, 6" WIDE WHITE EDGE LINES, AND 12" WIDE STOP LINE AS DIRECTED BY THE ENGINEER.
16. UTILITIES AS SHOWN ARE APPROXIMATE. CONTACT DIGSAFE PRIOR TO EXCAVATION.
17. THE CHICOPEE WATER DEPARTMENT IS NOT AFFILIATED WITH DIGSAFE. THE CONTRACTOR SHALL REQUEST THE MARKING OF THE WATER UTILITY DIRECTLY WITH THE CHICOPEE WATER DEPARTMENT PRIOR TO EXCAVATION.

NEW LOMBARD ROAD RECONSTRUCTION PLAN

CITY OF CHICOPEE ENGINEERING DEPARTMENT
115 BASKIN DRIVE
CHICOPEE, MASSACHUSETTS 01020
(413) 594-3416

DRAWN BY: CJC CHECKED BY: APPROVED BY:	DATE: SEPTEMBER, 2020 SCALE: 1" = 20'	DRAWING NUMBER NL-3

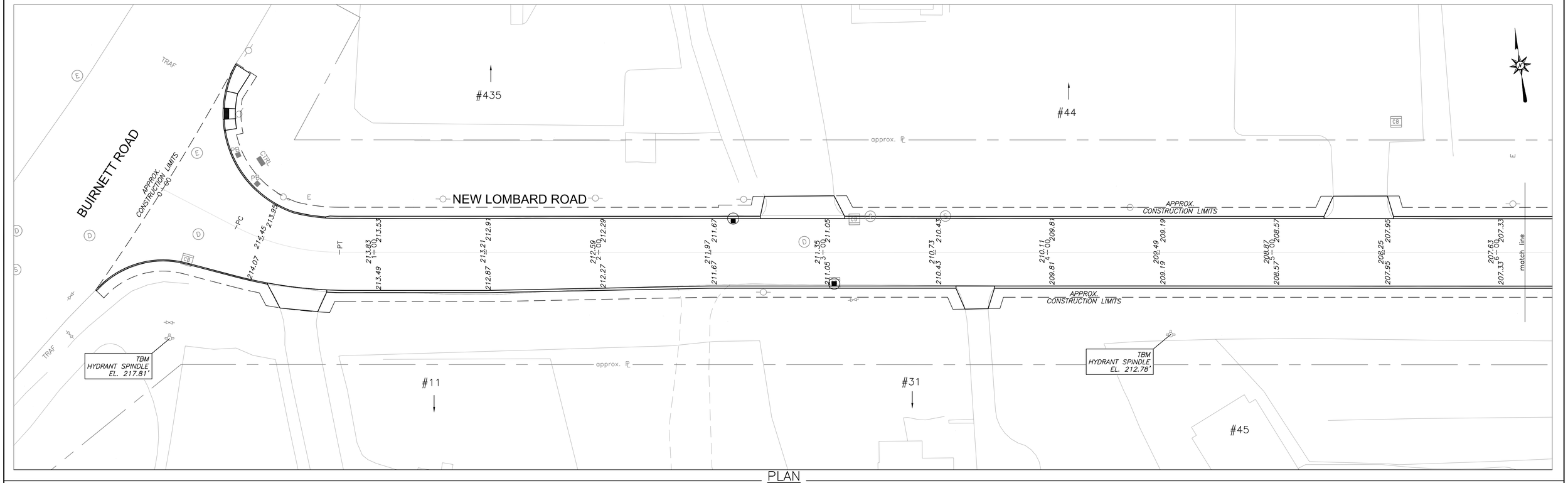

PLAN
1" = 20'

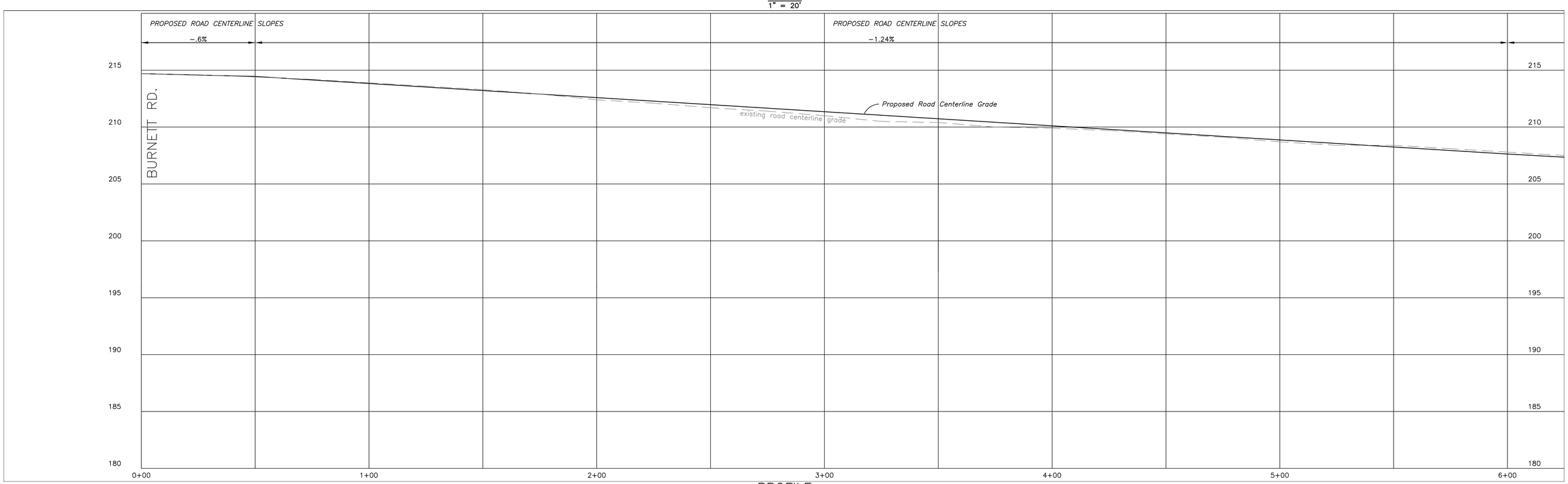

PROFILE
HOR.: 1" = 20'
VERT.: 1" = 4'

NOTE:

ALL GRADES REPRESENTED ARE FINISHED TOP COURSE GRADES.

NEW LOMBARD ROAD GRADING AND SURFACE PROFILE

CITY OF CHICOPEE ENGINEERING DEPARTMENT
115 BASKIN DRIVE
CHICOPEE, MASSACHUSETTS 01020
(413) 594-3416

DRAWN BY: CJC
CHECKED BY:
APPROVED BY:

DATE: SEPTEMBER, 2020
SCALE: AS NOTED

DRAWING NUMBER
NL-4

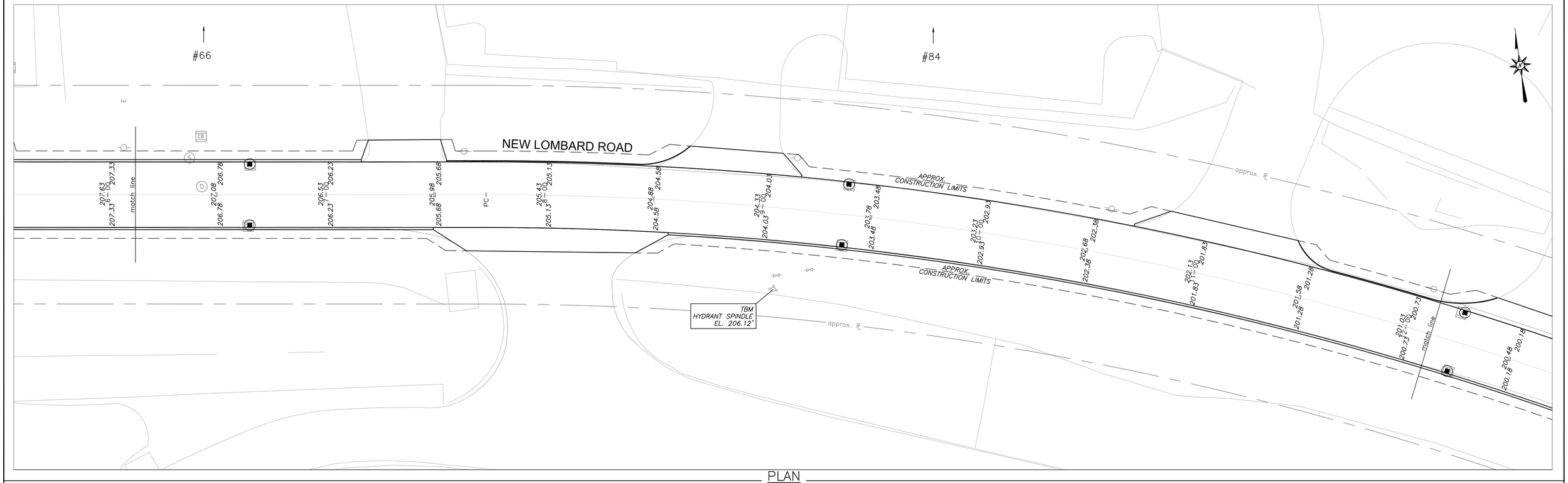

PLAN
1" = 20'

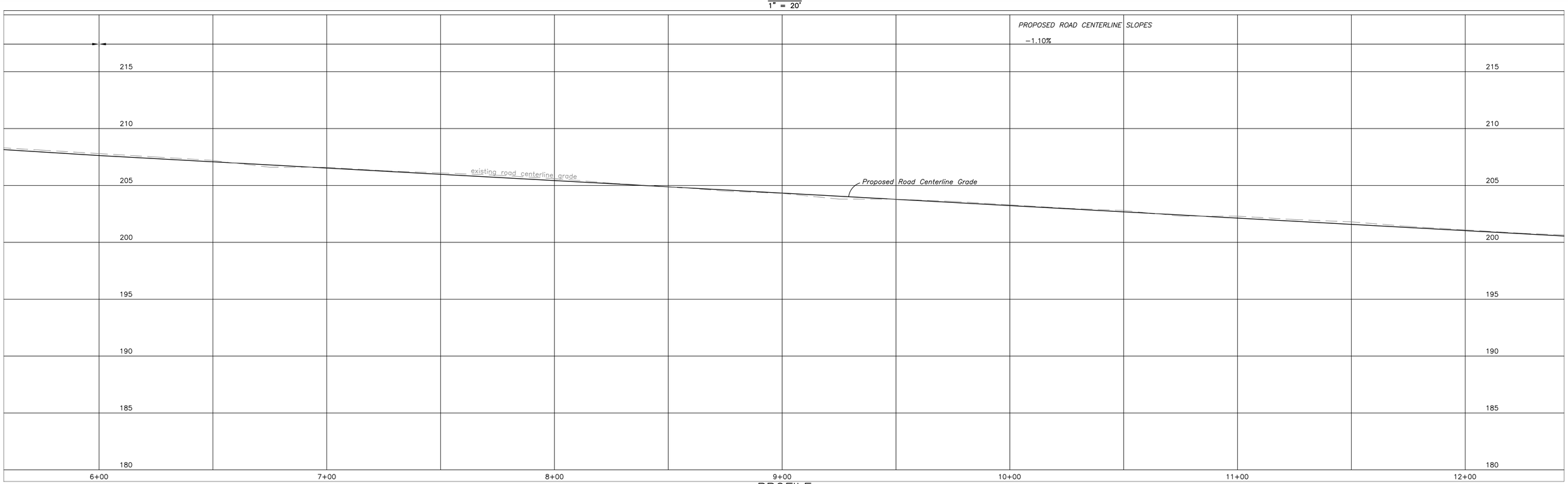

PROFILE
HOR.: 1" = 20'
VERT.: 1" = 4'

NOTE:

ALL GRADES REPRESENTED ARE FINISHED TOP COURSE GRADES.

NEW LOMBARD ROAD GRADING AND SURFACE PROFILE

CITY OF CHICOPEE ENGINEERING DEPARTMENT
115 BASKIN DRIVE
CHICOPEE, MASSACHUSETTS 01020
(413) 594-3416

DRAWN BY: CJC CHECKED BY: APPROVED BY:	DATE: SEPTEMBER, 2020 SCALE: AS NOTED	DRAWING NUMBER NL-5

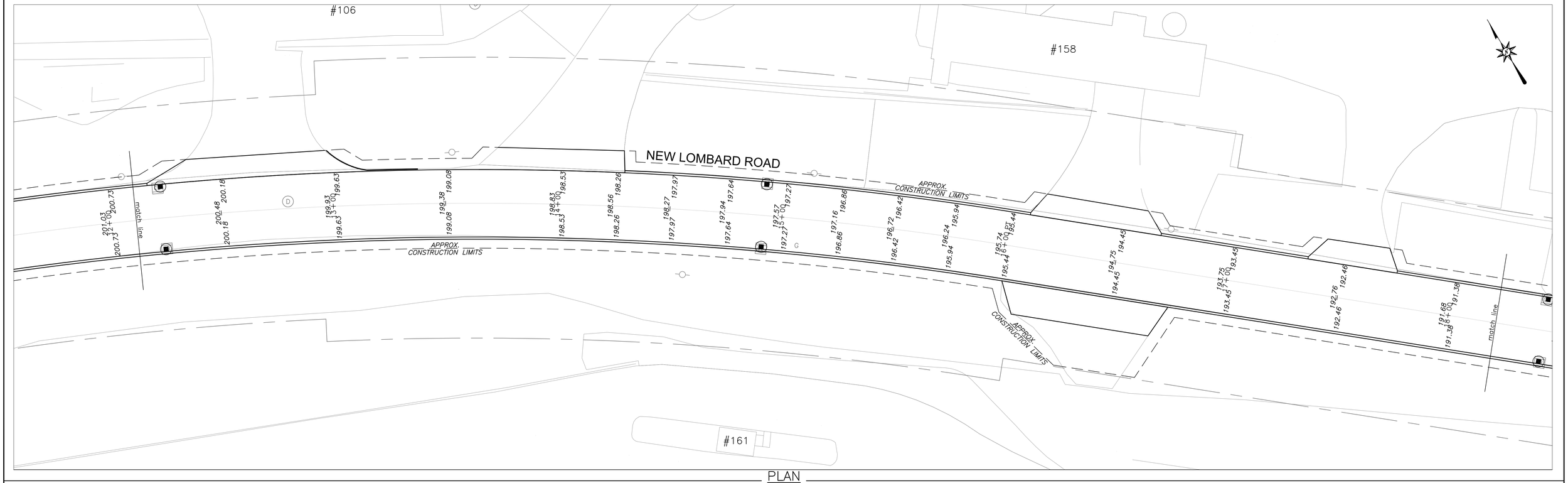

PLAN
1" = 20'

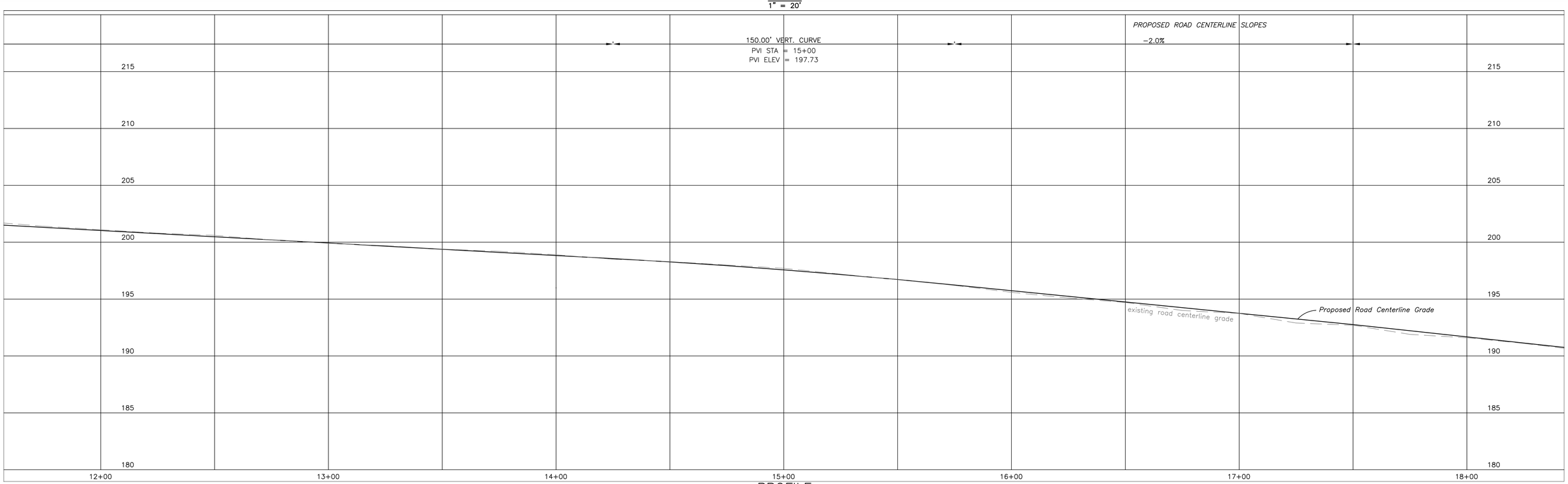

PROFILE
HOR.: 1" = 20'
VERT.: 1" = 4'

NOTE:

ALL GRADES REPRESENTED ARE FINISHED TOP COURSE GRADES.

NEW LOMBARD ROAD GRADING AND SURFACE PROFILE

CITY OF CHICOPEE ENGINEERING DEPARTMENT
115 BASKIN DRIVE
CHICOPEE, MASSACHUSETTS 01020
(413) 594-3416

DRAWN BY: CJC
CHECKED BY:
APPROVED BY:

DATE: SEPTEMBER, 2020
SCALE: AS NOTED

DRAWING NUMBER
NL-6

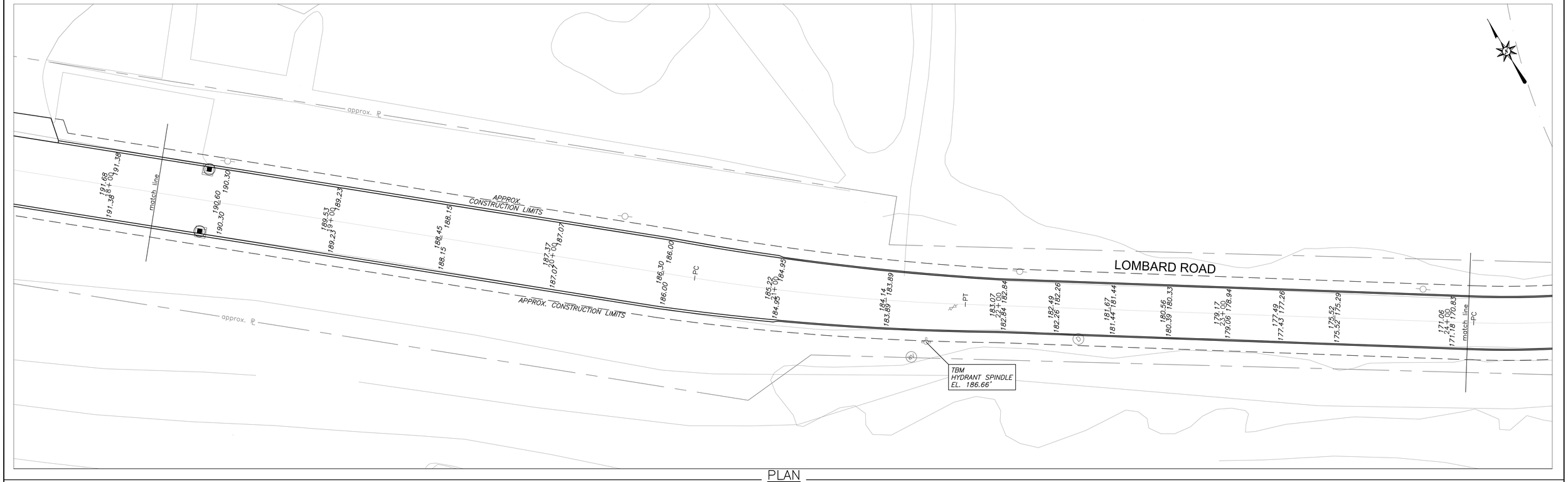

PLAN
1" = 20'

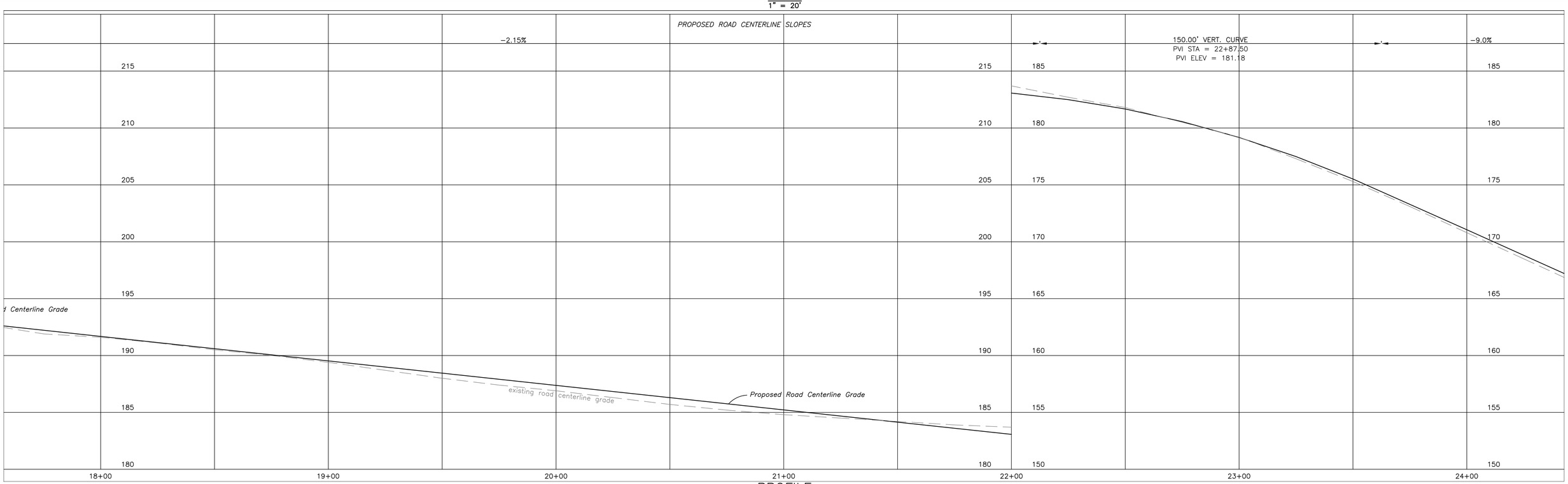

PROFILE
HOR.: 1" = 20'
VERT.: 1" = 4'

NOTE:

ALL GRADES REPRESENTED ARE FINISHED TOP COURSE GRADES.

NEW LOMBARD ROAD GRADING AND SURFACE PROFILE

CITY OF CHICOPEE ENGINEERING DEPARTMENT
115 BASKIN DRIVE
CHICOPEE, MASSACHUSETTS 01020
(413) 594-3416

DRAWN BY: CJC CHECKED BY: APPROVED BY:	DATE: SEPTEMBER, 2020 SCALE: AS NOTED	DRAWING NUMBER NL-7

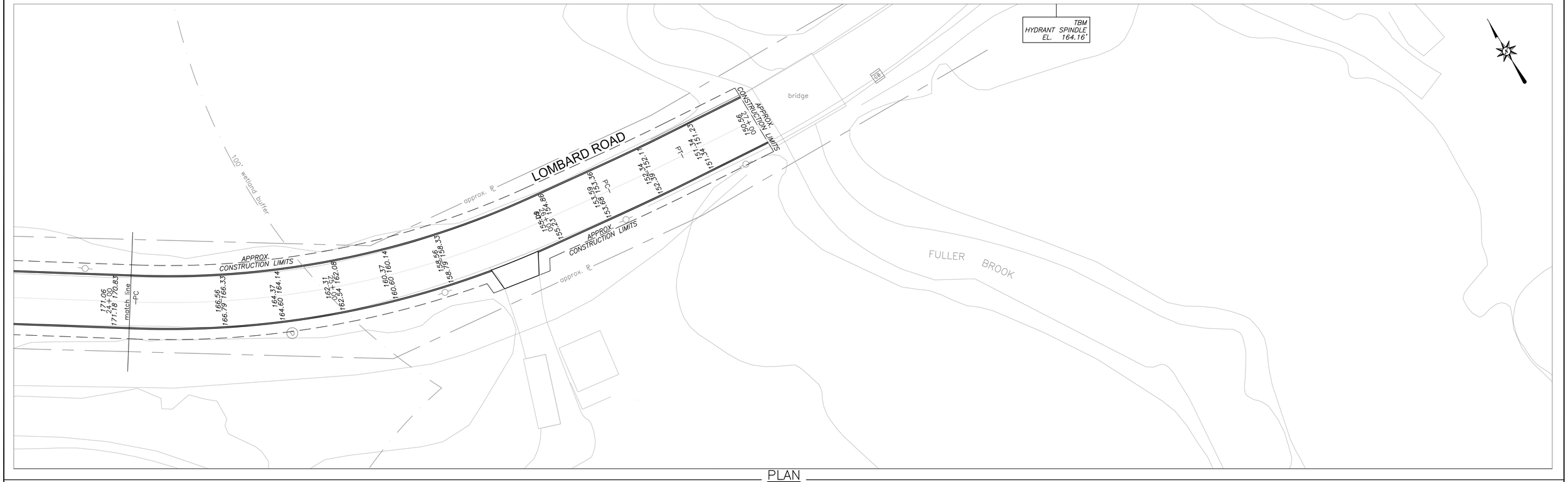

PLAN
1" = 20'

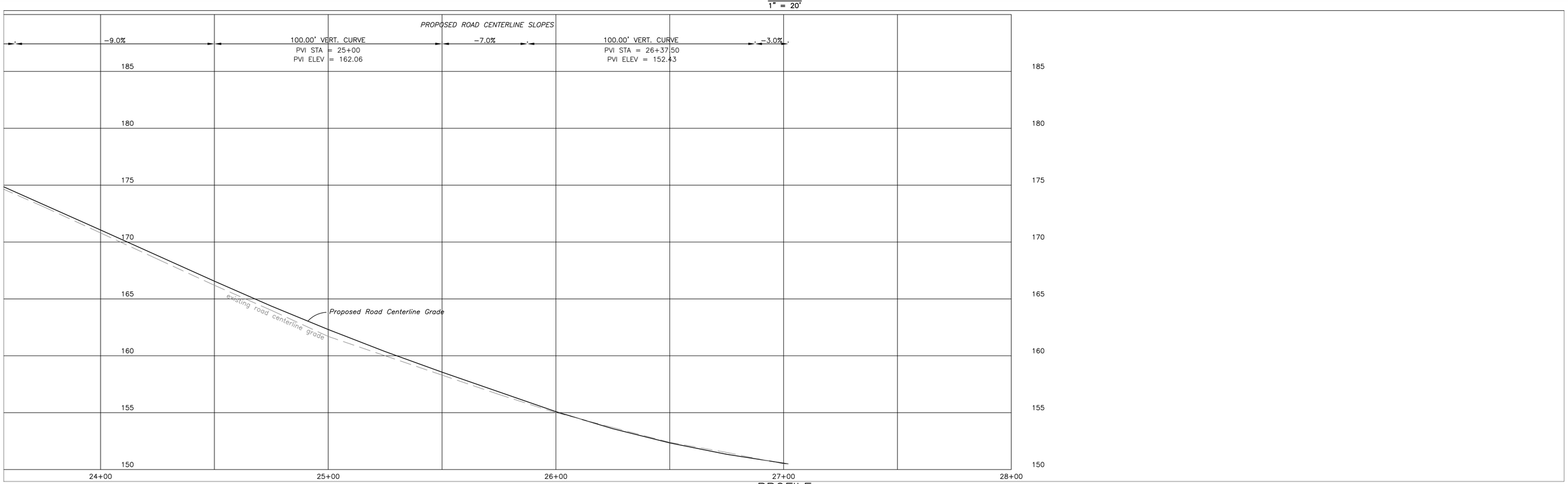

PROFILE
HOR.: 1" = 20'
VERT.: 1" = 4'

NOTE:

ALL GRADES REPRESENTED ARE FINISHED TOP COURSE GRADES.

NEW LOMBARD ROAD GRADING AND SURFACE PROFILE

CITY OF CHICOPEE ENGINEERING DEPARTMENT
115 BASKIN DRIVE
CHICOPEE, MASSACHUSETTS 01020
(413) 594-3416

DRAWN BY: CJC
CHECKED BY:
APPROVED BY:

DATE: SEPTEMBER, 2020
SCALE: AS NOTED

DRAWING NUMBER
NL-8

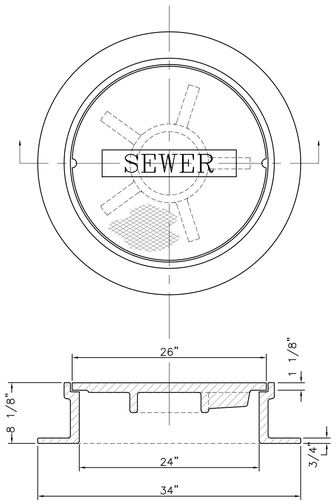

CAST IRON FRAME & COVER

NOTES:

FRAME AND COVER SHALL BE EJ 2112Z 2110A1 Set OR EQUAL.

DRAIN MANHOLE COVER SHALL HAVE "DRAIN" CAST INTO LID.

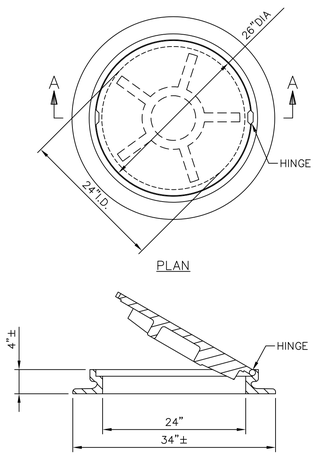

NOTES:

1. FRAME AND COVER ARE MANUFACTURED FROM DUCTILE IRON.
2. LETTERING IS CAST INTO COVERS AS SPECIFIED.

DUCTILE IRON MANHOLE FRAME & COVER

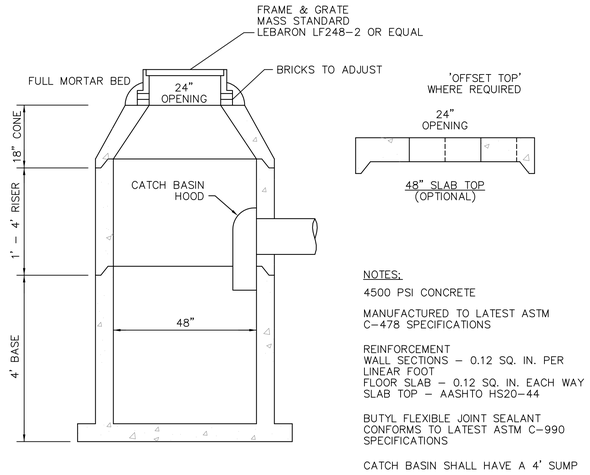

NOTES:

4500 PSI CONCRETE

MANUFACTURED TO LATEST ASTM C–478 SPECIFICATIONS

REINFORCEMENT
WALL SECTIONS – 0.12 SQ. IN. PER LINEAR FOOT
FLOOR SLAB – 0.12 SQ. IN. EACH WAY
SLAB TOP – AASHTO HS20–44

BUTYL FLEXIBLE JOINT SEALANT CONFORMS TO LATEST ASTM C–990 SPECIFICATIONS

CATCH BASIN SHALL HAVE A 4' SUMP

TYPICAL PRECAST CONCRETE CATCH BASIN W/ HOOD

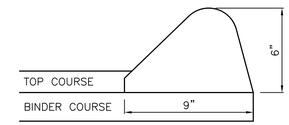

TYPE–2 BERM

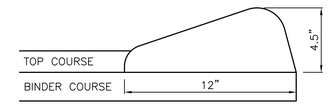

TYPE A–1 MODIFIED BERM

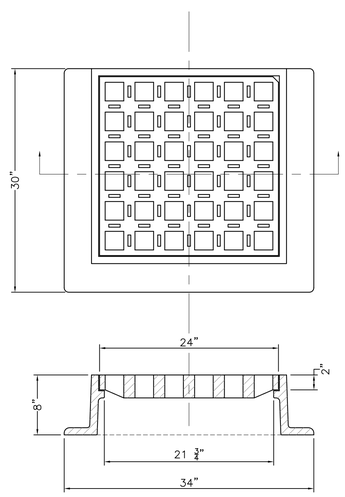

CAST IRON FRAME & GRATE

NOTE:

FRAME AND GRATE SHALL BE EJ 5524 Frame AND 5520M5 Grate OR EQUAL.

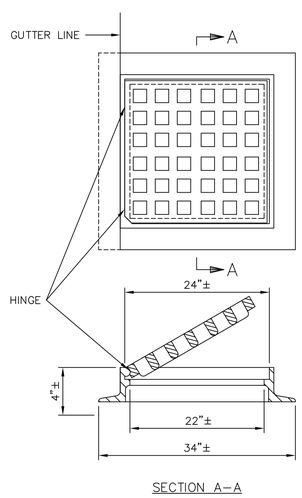

NOTE:

MATERIAL – DUCTILE IRON, SEE SPECIFICATIONS

DUCTILE IRON CATCH BASIN FRAME & GRATE

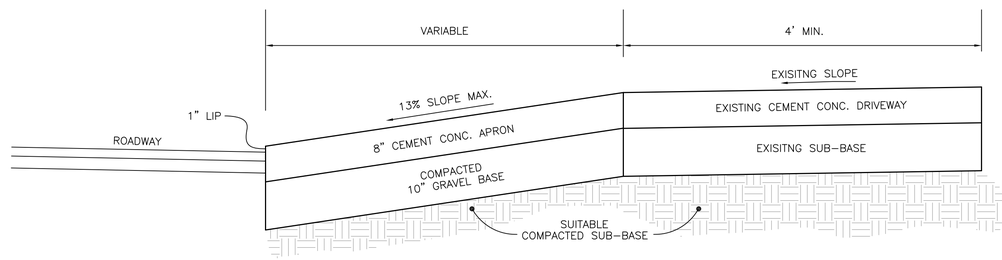

CEMENT CONC. APRON – COMMERCIAL TRUCK ENTRANCE

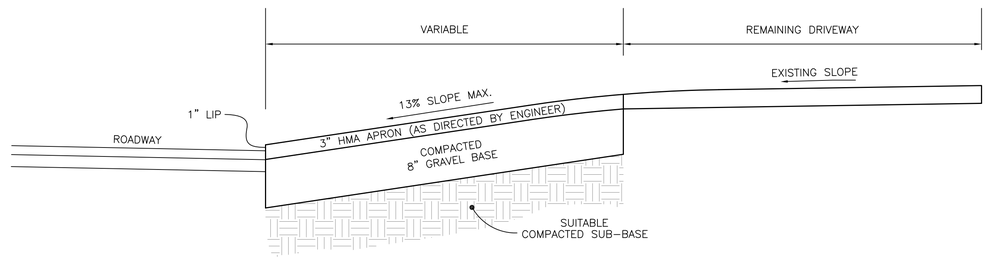

HMA DRIVEWAY APRON

NOTE:

HOT MIX ASPHALT FOR DRIVEWAY APRONS TO BE APPLIED WITH TWO COURSES.

CONSTRUCTION DETAILS

CITY OF CHICOPEE ENGINEERING DEPARTMENT
115 BASKIN DRIVE
CHICOPEE, MASSACHUSETTS 01020
(413) 594–3416

DRAWN BY: CJC CHECKED BY: APPROVED BY:	DATE: SEPTEMBER, 2020 SCALE: N.T.S.	DRAWING NUMBER D–1

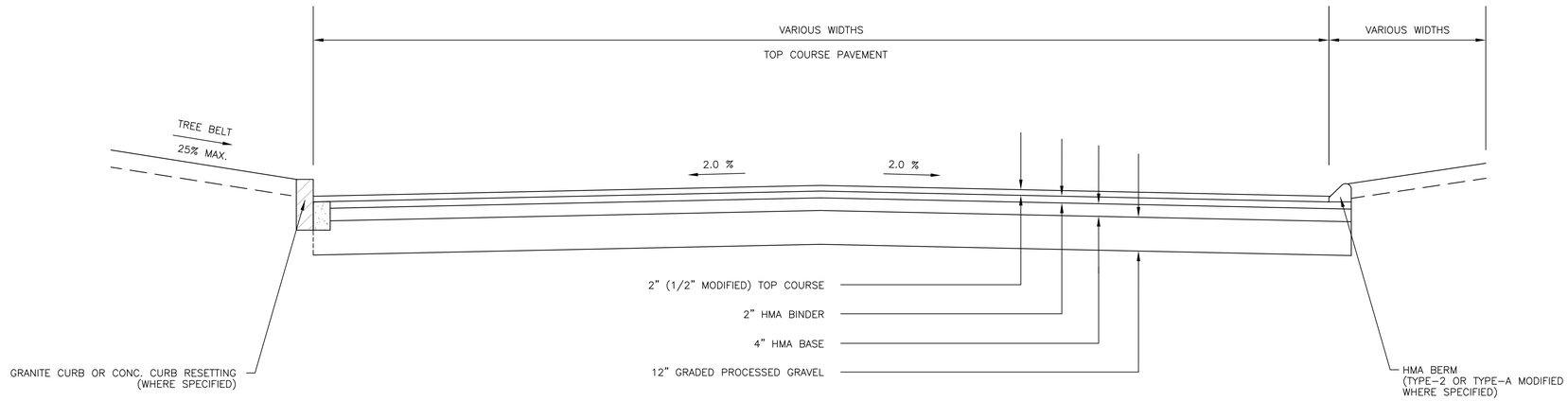

NEW LOMBARD ROAD
TYPICAL ROADWAY RECONSTRUCTION CROSS SECTION
FULL-DEPTH RECONSTRUCTION

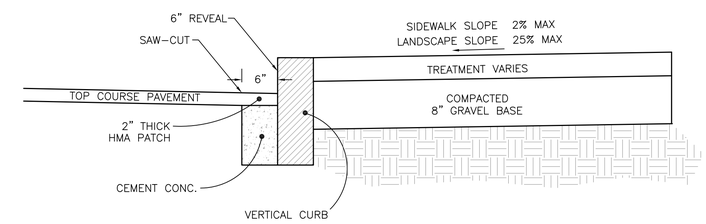

VERTICAL CURB RE-SETTING

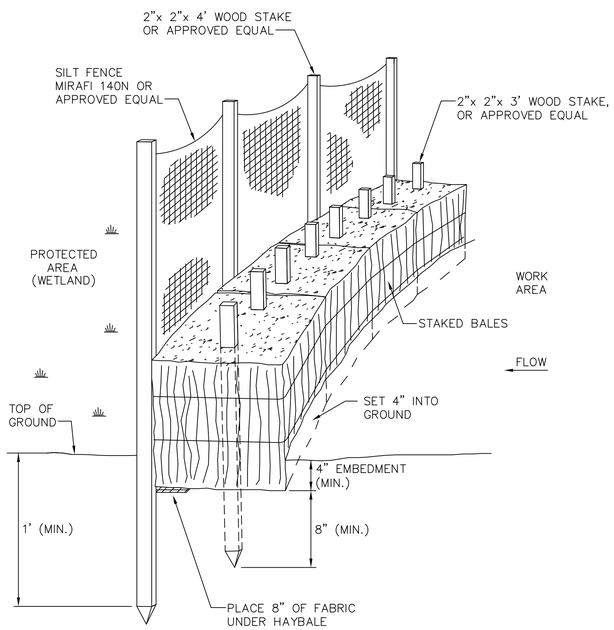

HAYBALES AND SILTATION FENCE

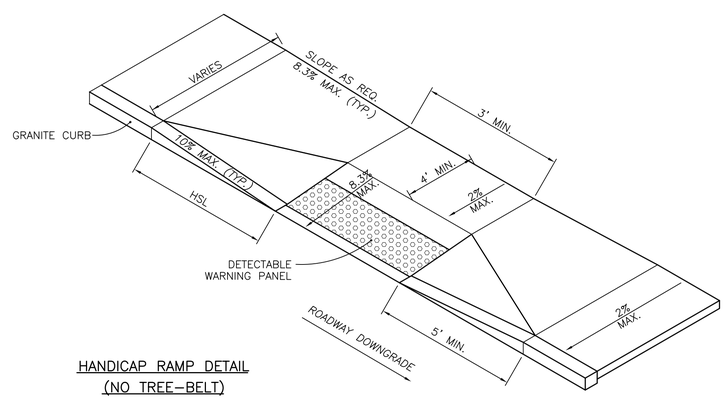

HANDICAP RAMP DETAIL
(NO TREE-BELT)
N.T.S.

ARCHITECTURAL ACCESS BOARD TOLERANCES

THE CONTRACTOR IS HEREBY NOTIFIED THAT THEY ARE ULTIMATELY RESPONSIBLE FOR CONSTRUCTING ALL PROJECT ELEMENTS IN STRICT COMPLIANCE WITH THE CURRENT AAB RULES, REGULATIONS AND STANDARDS.

ALL CONSTRUCTION ELEMENTS IN THIS PROJECT ASSOCIATED WITH SIDEWALKS, WALKWAYS, WHEELCHAIR RAMPS, AND CURB CUTS ARE CONTROLLED BY 521CMR – RULES AND REGULATIONS OF THE ARCHITECTURAL ACCESS BOARD (AAB).

THE AAB RULES AND REGULATIONS SPECIFY MAXIMUM SLOPES AND MINIMUM DIMENSIONS REQUIRED FOR CONSTRUCTION ACCEPTANCE. THERE IS NO TOLERANCE ALLOWED FOR SLOPES GREATER THAN THE MAXIMUM SLOPE NOR FOR DIMENSIONS LESS THAN THE MINIMUM DIMENSIONS.

CONTRACTORS SHALL ESTABLISH GRADE ELEVATIONS AT ALL WHEELCHAIR RAMP LOCATIONS, AND SHALL SET TRANSITION LENGTHS ACCORDING TO THE APPROPRIATE TABLE IN THE CONSTRUCTION STANDARDS (OR TO THE DETAILS SHOWN ON THE PLANS)

ALL WHEELCHAIR RAMP JOINTS AND TRANSITION SECTIONS WHICH DEFINE GRADE CHANGES SHALL BE FORMED, STAKED, AND CHECKED PRIOR TO PLACING CEMENT CONCRETE. ALL GRADE CHANGES ARE TO BE MADE AT JOINTS.

LOCATION OF THE CURB CUT ALONG A RADIUS AT AN INTERSECTION IS DEPENDENT UPON THE SIZE OF THE RADIUS AND OTHER FIELD CONDITIONS. VERIFY LOCATION WITH ENGINEER PRIOR TO CONSTRUCTION.

CONSTRUCTION DETAILS AND TYPICAL CROSS-SECTION	CITY OF CHICOPEE ENGINEERING DEPARTMENT 115 BASKIN DRIVE CHICOPEE, MASSACHUSETTS 01020 (413) 594-3416		
	DRAWN BY: CJC CHECKED BY: APPROVED BY:	DATE: SEPTEMBER, 2020 SCALE: N.T.S.	DRAWING NUMBER D-2

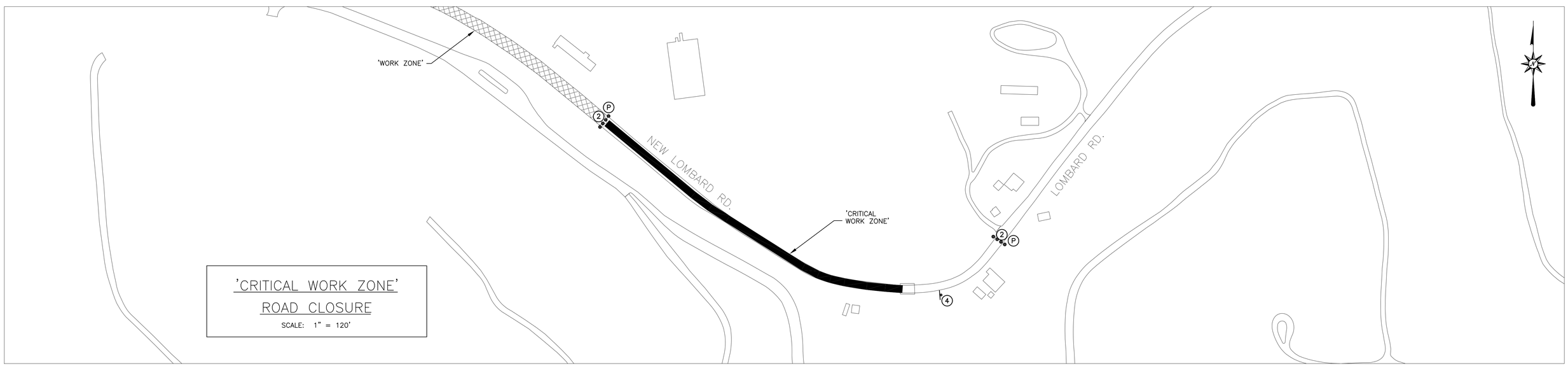

REGULATORY AND GUIDE SIGNS FOR CONSTRUCTION

1

ROAD CLOSED AHEAD
LOCAL TRAFFIC ONLY

(60"x30")
R11–3A

2 EACH

2

ROAD CLOSED

(60"x30")
R11–2

2 EACH

3

ROAD WORK AHEAD

(48"x48")
W20–1

2 EACH

4

END ROAD WORK

(48"x24")
G20–2A

2 EACH

LEGEND

- *WORK ZONE (local traffic only)*
- *CRITICAL WORK ZONE (no traffic, see notes)*
- (P) *POLICE OFFICER*
- • *DRUM W/ FLASHER*
- *SIGN W/ POST*

NOTES:

1. THE TRAFFIC MANAGEMENT PLAN W/ 'LOCAL TRAFFIC ONLY' ROAD CLOSURE SHALL BE IN EFFECT FOR ROAD EXCAVATION, ROAD GRADING, AND ROAD PAVING OPERATIONS. ROAD CLOSURE WILL NOT INCLUDE CATCH BASIN INSTALLATION, DRIVEWAY INSTALLATION, OR BERM INSTALLATION UNLESS THIS WORK IS BEING PERFORMED IN THE 'CRITICAL WORK ZONE'.
2. USE OF SIGN (1) AND ANY DRUMS USED IN SETTING UP 'LOCAL TRAFFIC ONLY' ROAD CLOSURE SHALL BE SET UP AND REMOVED EACH DAY ALONG WITH RESTORING THE ROAD SURFACE TO AN ACCEPTABLE DRIVING CONDITION.
3. VEHICULAR TRAFFIC WILL NOT BE PERMITTED THROUGH THE 'CRITICAL WORK ZONE' DURING WORK HOURS OF ACTIVE CONSTRUCTION ACTIVITIES IN THE 'CRITICAL WORK ZONE'.
4. USE OF SIGN (2) AND ANY DRUMS USED IN SETTING UP 'CRITICAL WORK ZONE' ROAD CLOSURE SHALL BE IN ADDITION TO TRAFFIC CONTROL DEVICES USED IN SETTING UP 'LOCAL TRAFFIC ONLY' ROAD CLOSURE WHEN CONSTRUCTION IS ACTIVELY TAKING PLACE IN THE 'CRITICAL WORK ZONE'.
5. UTILITY WORK, SUCH AS CATCH BASIN INSTALLATION, WHICH INVOLVES A LANE SHUT–DOWN SHALL INCLUDE TWO POLICE DETAILS MANAGING AN ALTERNATING ONE–WAY TRAFFIC PATTERN PER THE LATEST EDITION OF THE MUTCD AND MassDOT STANDARD TRAFFIC CONTROL PLANS.
6. ALL SIGNS W/ POSTS SHALL BE IN PLACE BEFORE CONSTRUCTION BEGINS.
7. ALL CONSTRUCTION SIGNS SHALL BE BLACK LEGEND ON A REFLECTORIZED ORANGE BACKGROUND.

NEW LOMBARD ROAD TRAFFIC CONTROL PLAN

CITY OF CHICOPEE ENGINEERING DEPARTMENT
115 BASKIN DRIVE
CHICOPEE, MASSACHUSETTS 01020
(413) 594–3416

DRAWN BY: CJC CHECKED BY: APPROVED BY: SJF	DATE: SEPTEMBER, 2020 SCALE: AS NOTED	DRAWING NUMBER NL–TR