CITY OF CHICOPEE
ENGINEERING DEPARTMENT
BONNEVILLE AVENUE RECONSTRUCTION ~ 2015

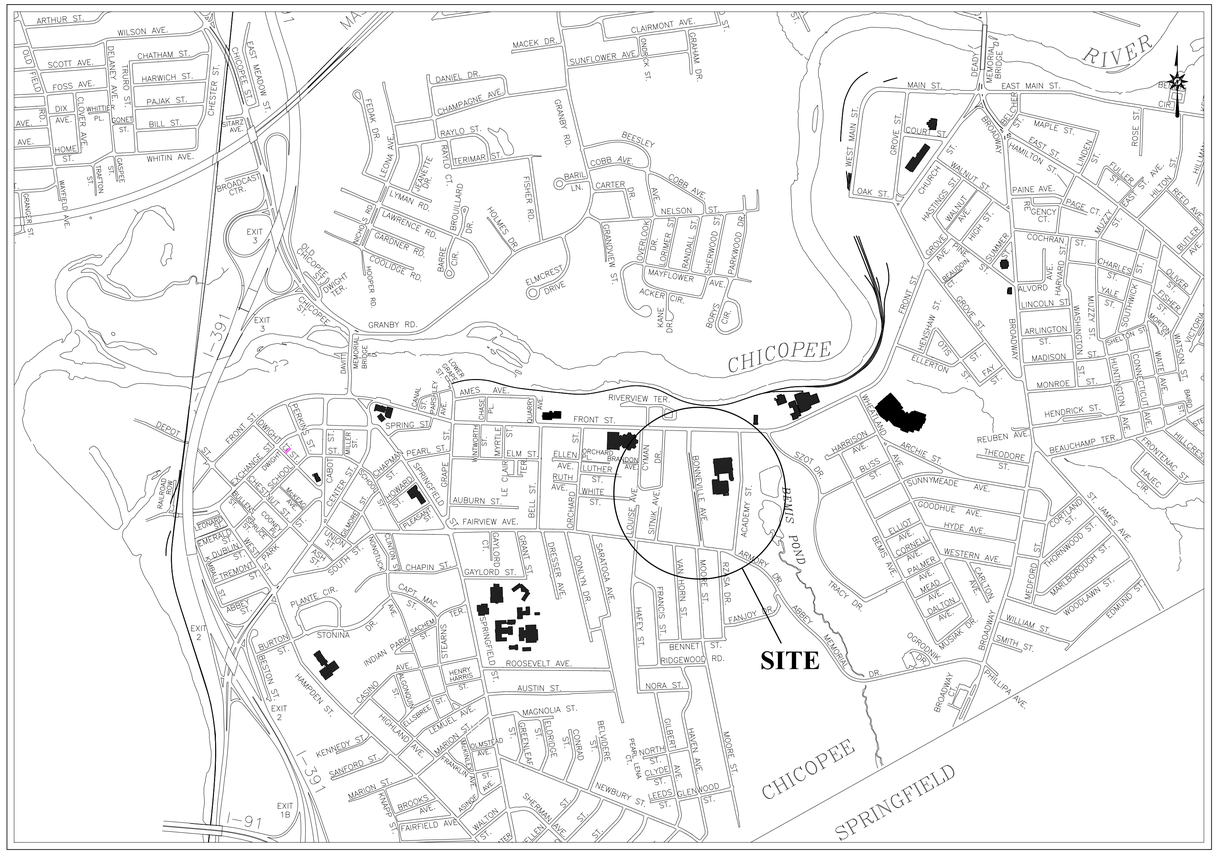

RICHARD J. KOS
MAYOR

JEFFREY A. NEECE
D.P.W. SUPERINTENDENT

STEVEN J. FREDERICK
CITY ENGINEER

TABLE OF CONTENTS

SHEET	TITLE
1	BONNEVILLE AVE. RECONSTRUCTION
2	SEWER & DRAIN INSTALLATION
3	SEWER & DRAIN INSTALLATION
4	WATER MAIN INSTALLATION
5	PROPOSED GRADING
6	PROPOSED LINE STRIPING AND SIGNAGE
7	PROPOSED LANDSCAPING
8	UTILITY INSTALLATION BY OTHERS
9	TRAFFIC CONTROL PLAN
D-1	CONSTRUCTION NOTES, DETAILS, AND SCHEDULES
D-2	CONSTRUCTION DETAILS
D-3	PLANTING & DRAINAGE DETAILS
D-4	TYPICAL CROSS-SECTIONS

PREPARED BY:
CITY OF CHICOPEE
ENGINEERING DEPARTMENT

APRIL ~ 2015

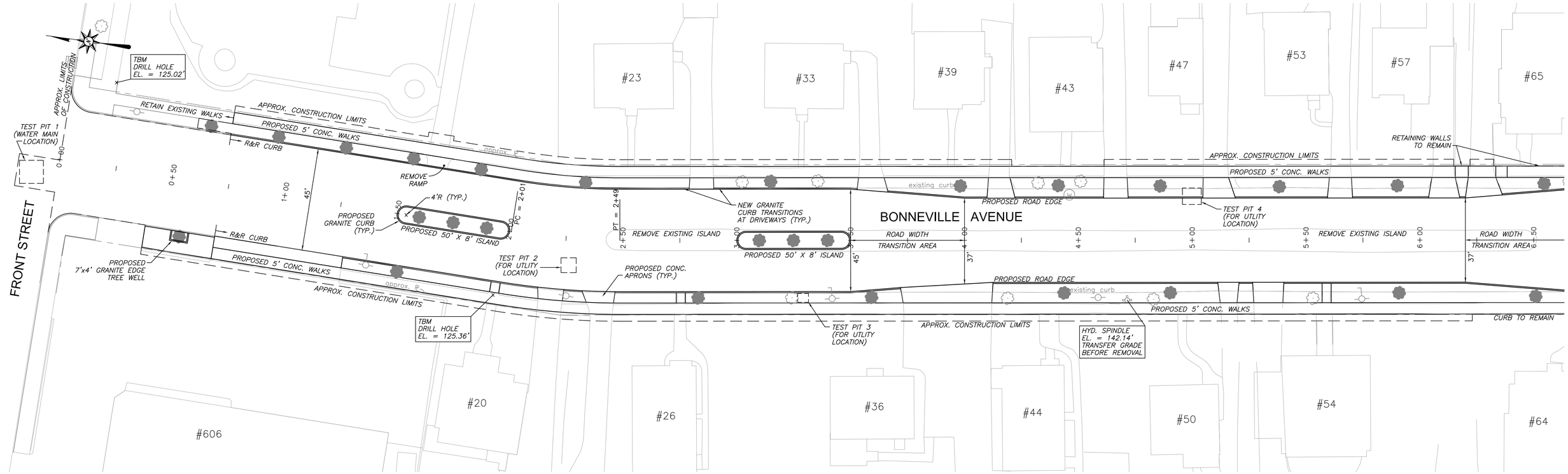

STA. 0+00 TO 6+50

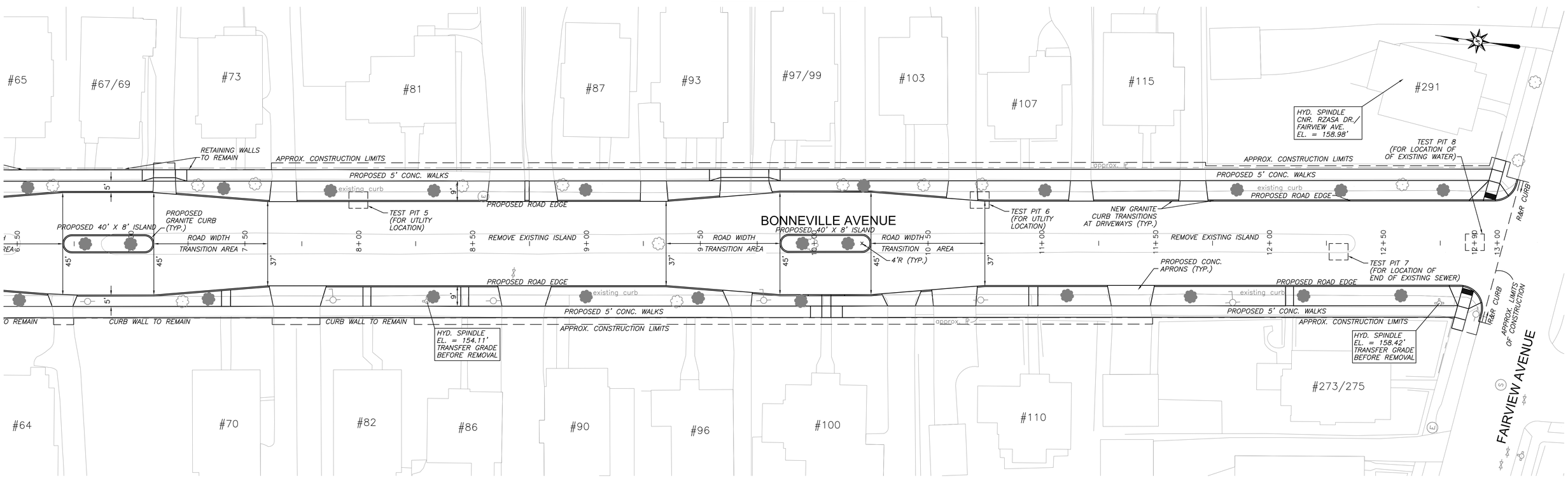

STA. 6+50 TO END

Proposed tree location

NOTES:

1. SAW-CUT AS REQUIRED WHERE THE LIMITS OF CONSTRUCTION BISECT PAVED AREAS.
2. TRANSFER ALL EXISTING HYDRANT SPINDLE BENCHMARKS PRIOR TO REMOVING EXISTING HYDRANTS.
3. SEE SHEET D-1 FOR ADDITIONAL CONSTRUCTION NOTES.

BONNEVILLE AVENUE RECONSTRUCTION

CITY OF CHICOPEE ENGINEERING DEPARTMENT
115 BASKIN DRIVE
CHICOPEE, MASSACHUSETTS 01020
(413) 594-3416

DRAWN BY: CJC CHECKED BY: APPROVED BY: SJF	DATE: APRIL, 2015 SCALE: 1" = 20'	DRAWING NUMBER 1

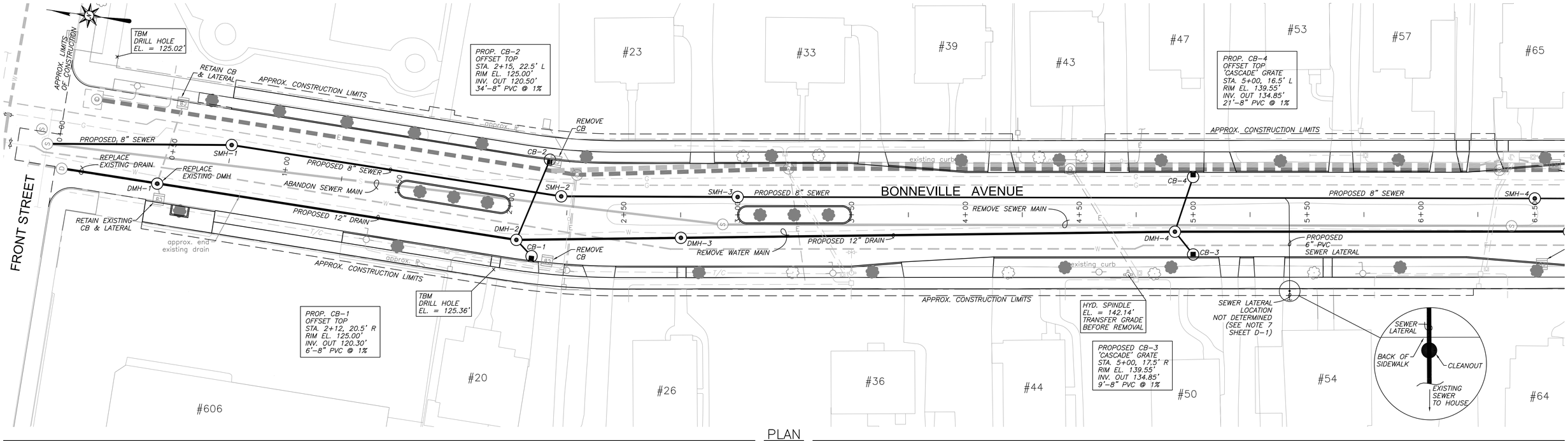

PLAN

1"=20'

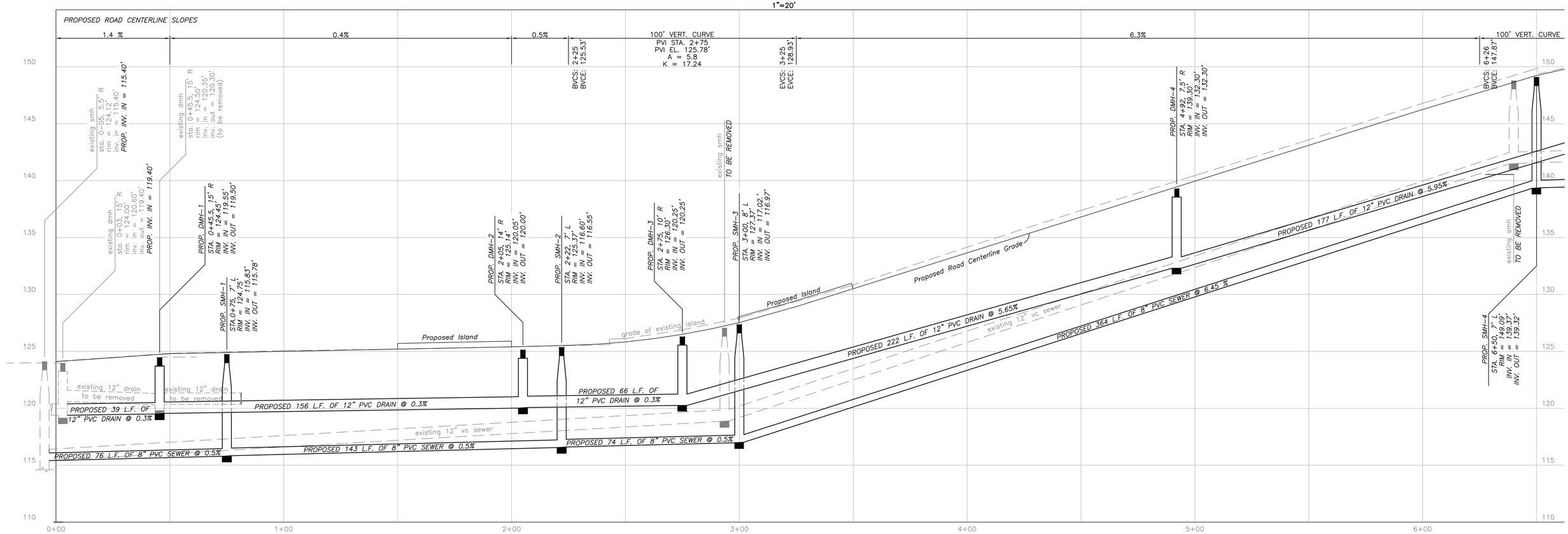

CONSTRUCTION PROFILE

HOR. 1" = 20'
VERT. 1" = 4'

Proposed tree location

NOTE:

THE EXISTING SEWER AND WATER MAINS (ONCE ABANDONED) SHALL BE REMOVED DURING EXCAVATION FOR THE STORM DRAIN MAIN INSTALLATION. EXISTING SEWER AND WATER MAIN THAT DOES NOT OCCUPY SPACE WITHIN THE STORM DRAIN MAIN TRENCH (OR OTHER UTILITY TRENCH) SHALL BE CAPPED AND REMAIN ABANDONED IN PLACE.

BONNEVILLE AVENUE SEWER AND DRAIN INSTALLATION

CITY OF CHICOPEE ENGINEERING DEPARTMENT
115 BASKIN DRIVE
CHICOPEE, MASSACHUSETTS 01020
(413) 594-3416

DRAWN BY: CJC CHECKED BY: APPROVED BY: SJF	DATE: APRIL, 2015 SCALE: AS NOTED	DRAWING NUMBER 2

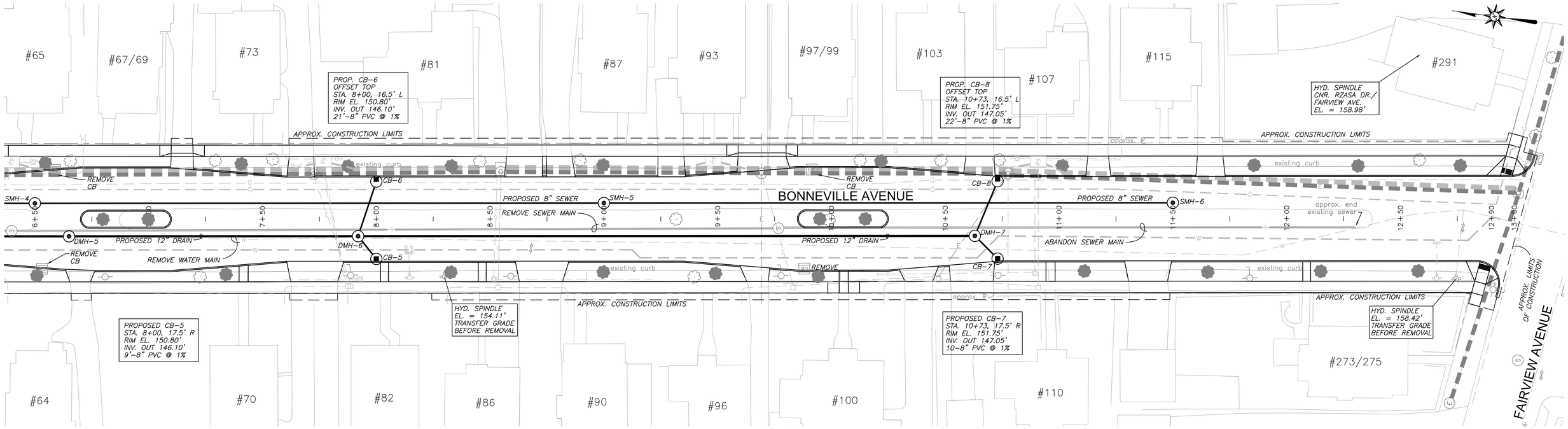

PLAN

1"=20'

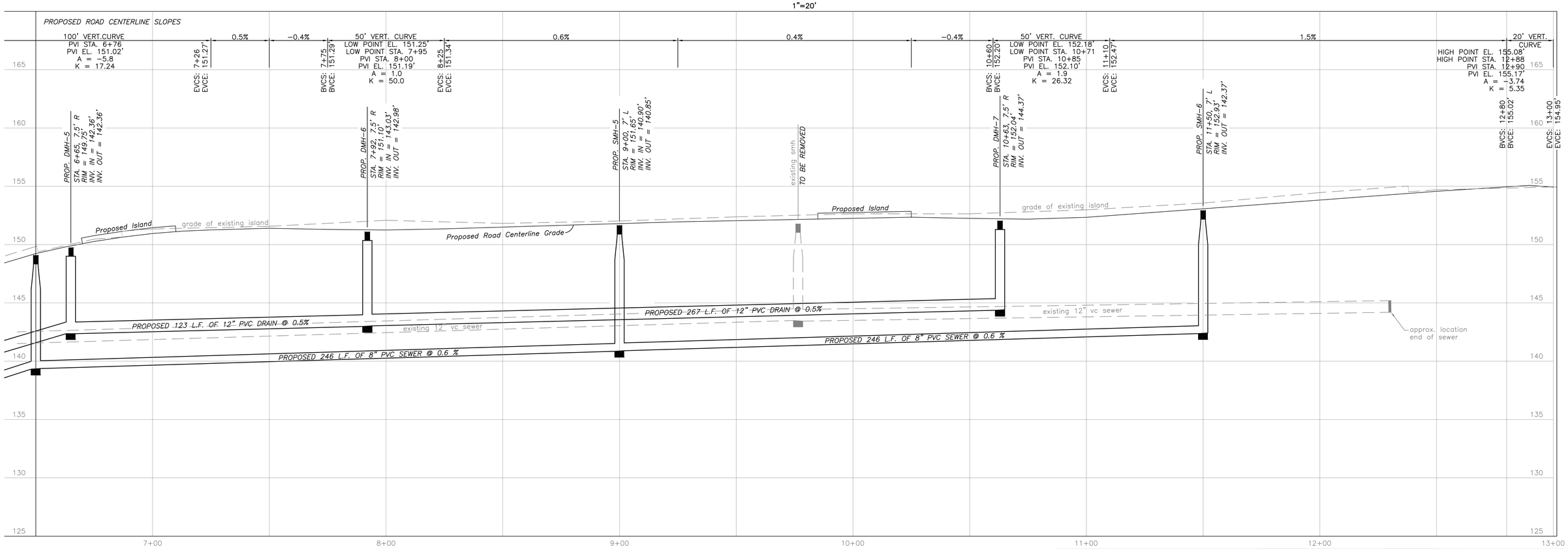

CONSTRUCTION PROFILE

HOR. 1" = 20'
VERT. 1" = 4'

Proposed tree location

BONNEVILLE AVENUE SEWER AND DRAIN INSTALLATION

CITY OF CHICOPEE ENGINEERING DEPARTMENT
115 BASKIN DRIVE
CHICOPEE, MASSACHUSETTS 01020
(413) 594-3416

DRAWN BY: CJC CHECKED BY: APPROVED BY: SJF	DATE: APRIL, 2015 SCALE: AS NOTED	DRAWING NUMBER 3

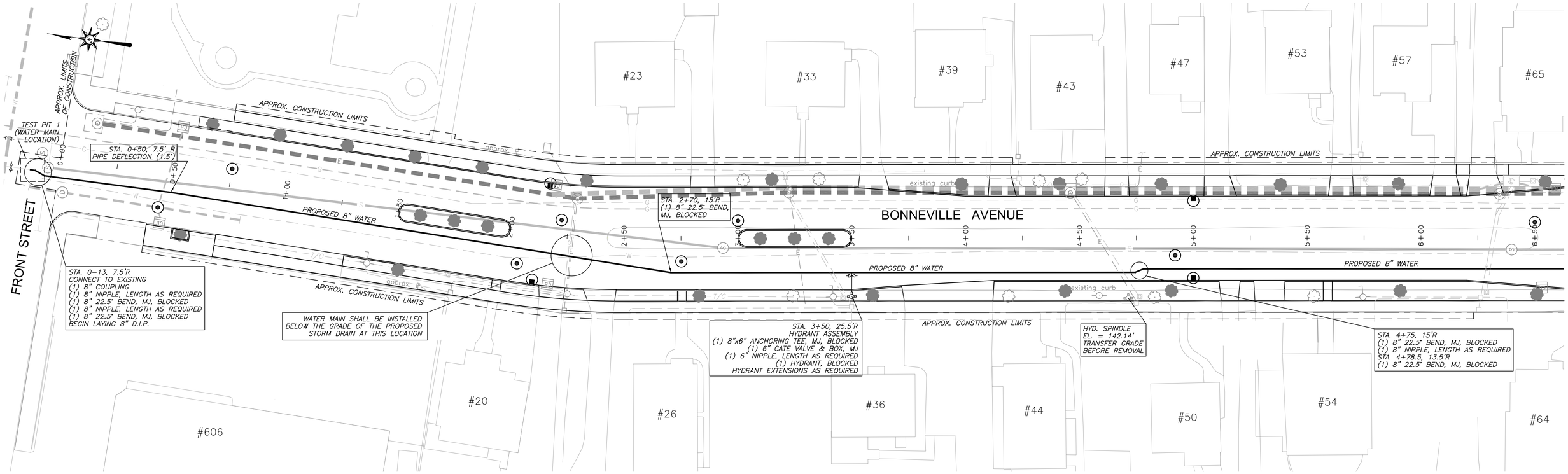

STA. 0+00 TO 6+50

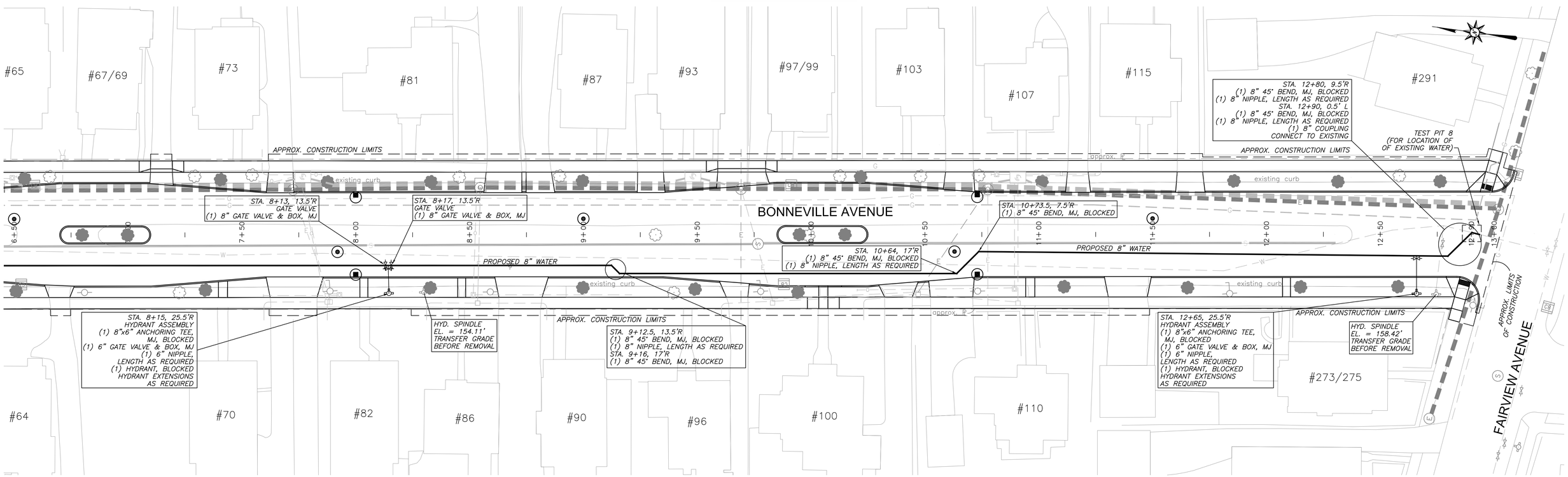

STA. 6+50 TO END

Proposed tree location

NOTES:

1. REFER TO THE CHICOPEE WATER DEPARTMENT CONSTRUCTION STANDARDS LOCATED IN THE CONTRACT DOCUMENTS.
2. TRANSFER ALL HYDRANT SPINDLE BENCHMARKS PRIOR TO REMOVING EXISTING HYDRANTS.

BONNEVILLE AVENUE WATER MAIN INSTALLATION

CITY OF CHICOPEE ENGINEERING DEPARTMENT
115 BASKIN DRIVE
CHICOPEE, MASSACHUSETTS 01020
(413) 594-3416

DRAWN BY: CJC CHECKED BY: APPROVED BY: SJF	DATE: APRIL, 2015 SCALE: 1" = 20'	DRAWING NUMBER 4

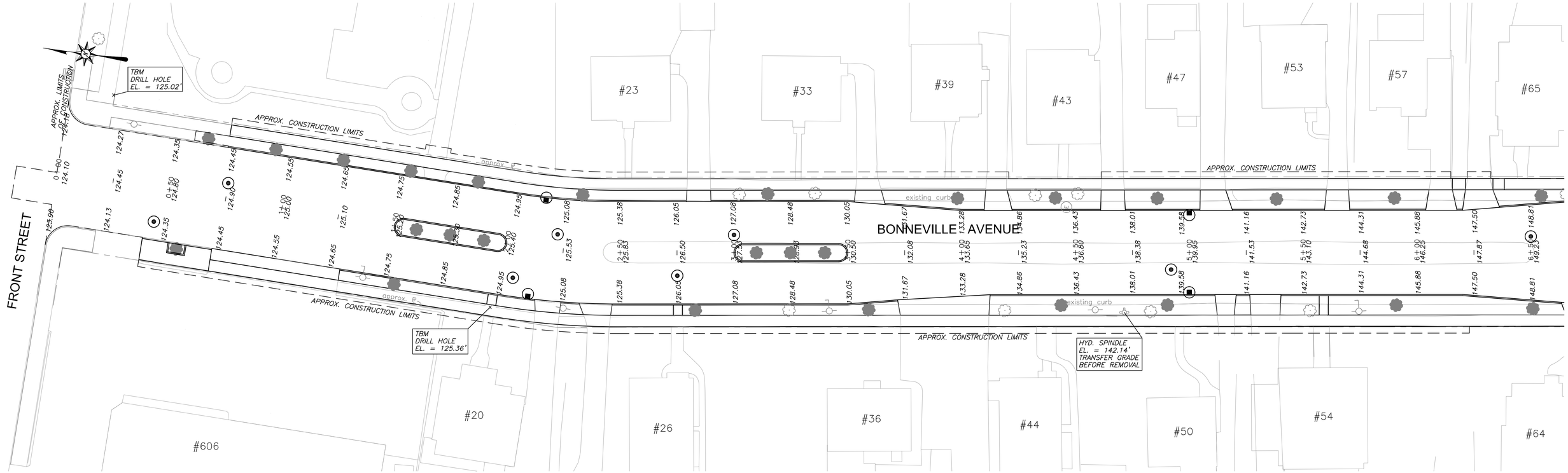

STA. 0+00 TO 6+50

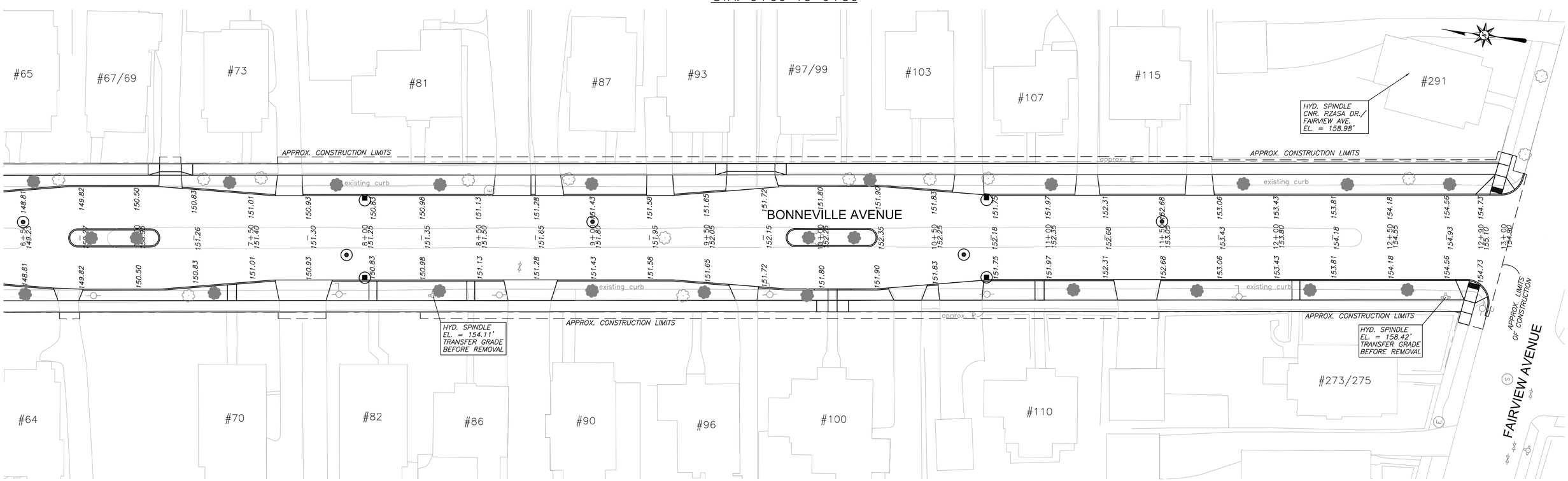

STA. 6+50 TO END

NOTES:

1. ALL GRADES REPRESENTED ARE FINISHED TOP COURSE GRADES.
2. TRANSFER ALL HYDRANT SPINDLE BENCHMARKS PRIOR TO REMOVING EXISTING HYDRANTS.

BONNEVILLE AVENUE PROPOSED GRADING

CITY OF CHICOPEE ENGINEERING DEPARTMENT
115 BASKIN DRIVE
CHICOPEE, MASSACHUSETTS 01020
(413) 594-3416

DRAWN BY: CJC CHECKED BY: APPROVED BY: SJF	DATE: APRIL, 2015 SCALE: 1" = 20'	DRAWING NUMBER 5

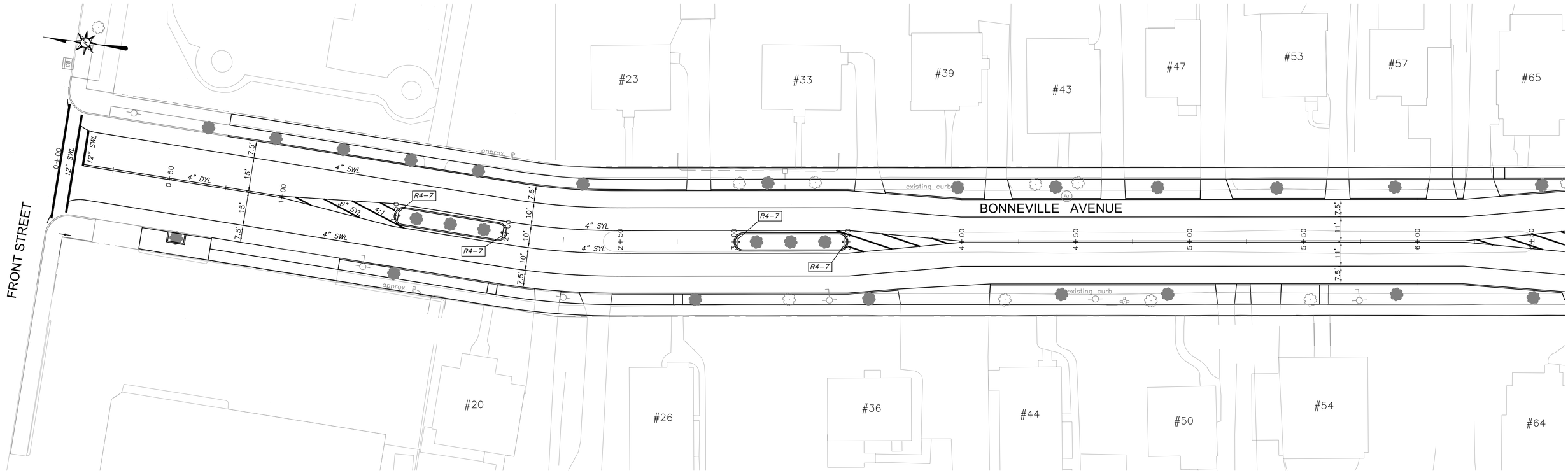

STA. 0+00 TO 6+50

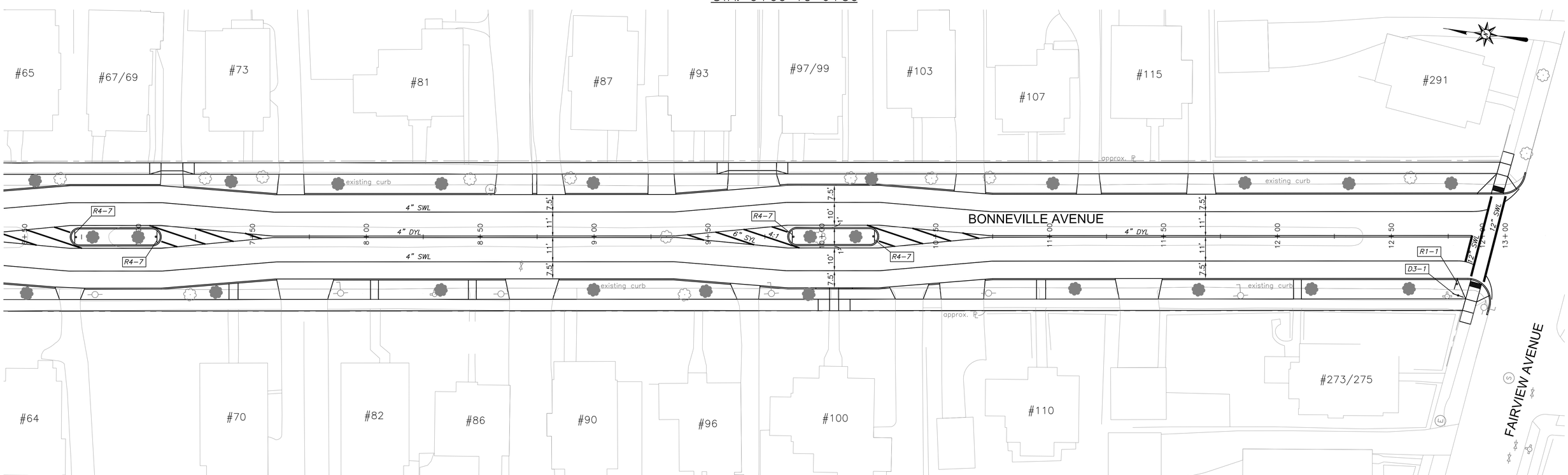

STA. 6+50 TO END

NOTES:

* SEE SIGN TABLE AND DETAIL ON SHEET D-1.

BONNEVILLE AVENUE
PROPOSED LINE STRIPING
AND SIGNAGE

CITY OF CHICOPEE ENGINEERING DEPARTMENT
115 BASKIN DRIVE
CHICOPEE, MASSACHUSETTS 01020
(413) 594-3416

DRAWN BY: CJC CHECKED BY: APPROVED BY: SJF	DATE: APRIL, 2015 SCALE: 1" = 20'	DRAWING NUMBER 6

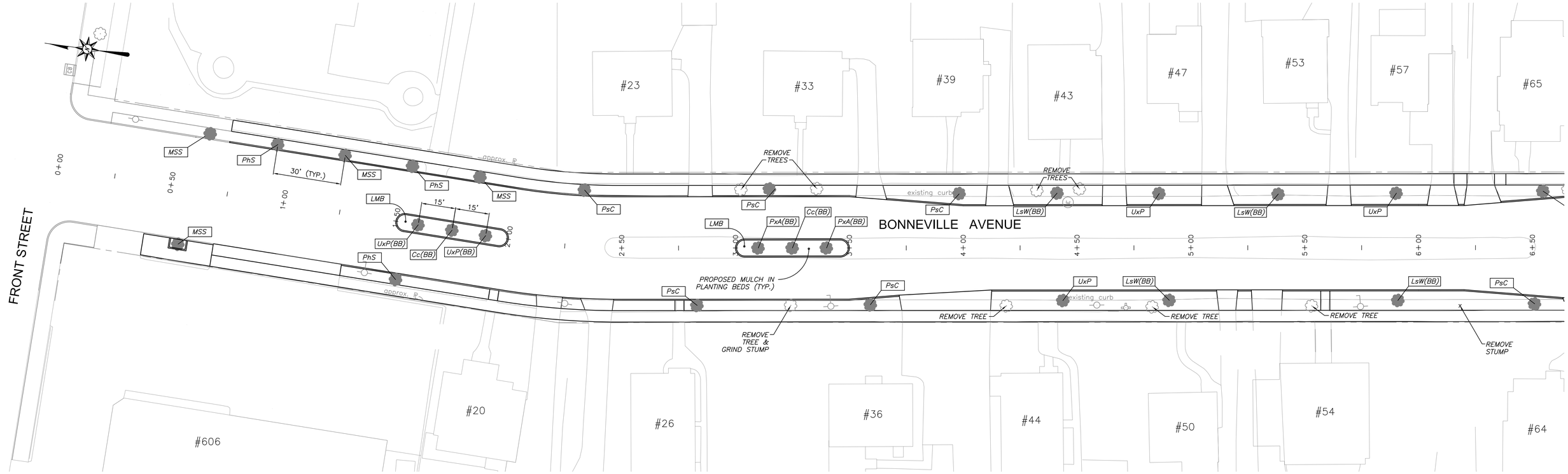

STA. 0+00 TO 6+50

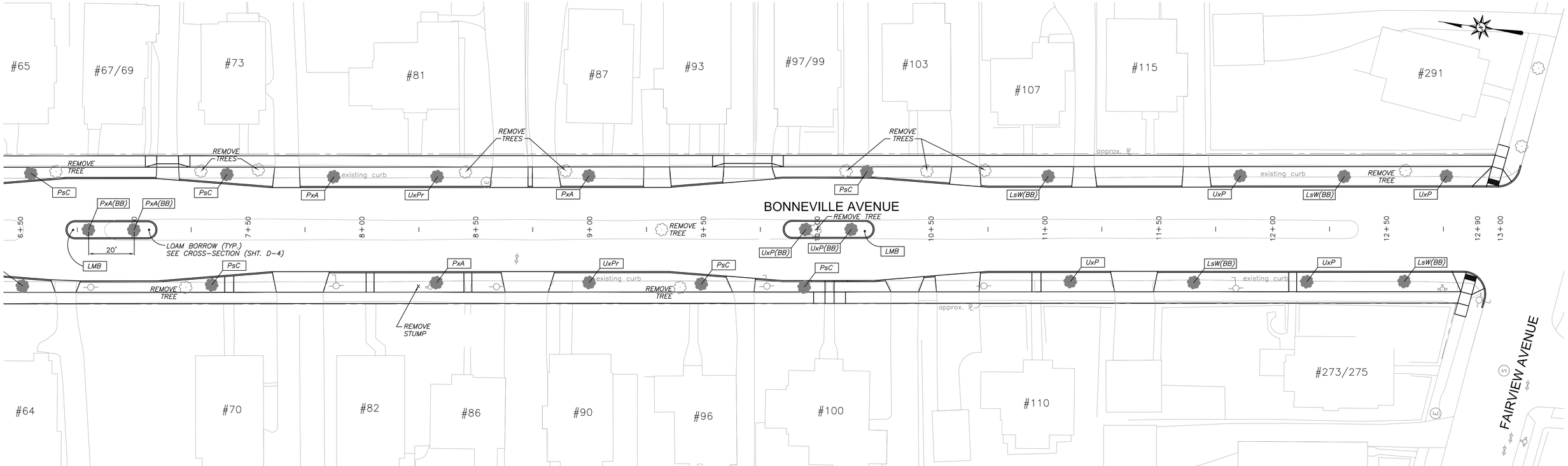

STA. 6+50 TO END

Proposed tree location

NOTES:

1. ALL TREE BELTS AND DISTURBED LAWN AREAS SHALL BE REPAIRED WITH LOAM AND SEED.
2. LIRIOPE GROUNDCOVER PLANTING SHALL BE THROUGHOUT THE TRAFFIC ISLANDS SPACED 12" O.C.
3. SEE THE PLANT LIST (SHT. D-3) FOR ADDITIONAL NOTES.

BONNEVILLE AVENUE PROPOSED LANDSCAPING

CITY OF CHICOPEE ENGINEERING DEPARTMENT
115 BASKIN DRIVE
CHICOPEE, MASSACHUSETTS 01020
(413) 594-3416

DRAWN BY: CJC CHECKED BY: APPROVED BY: SJF	DATE: APRIL, 2015 SCALE: 1" = 20'	DRAWING NUMBER 7

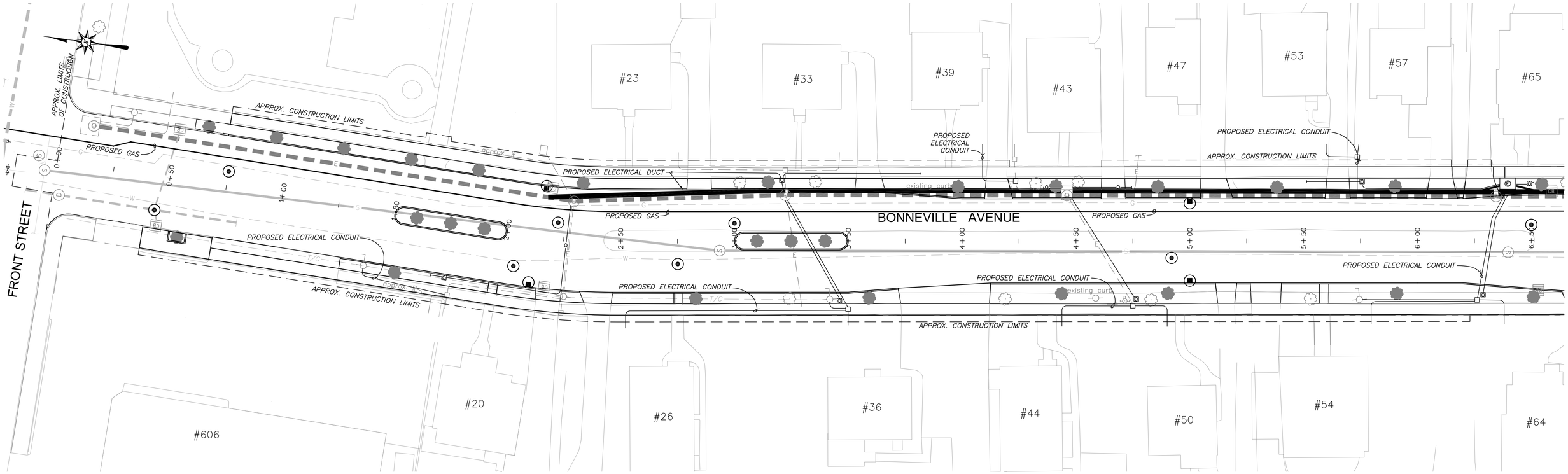

STA. 0+00 TO 6+50

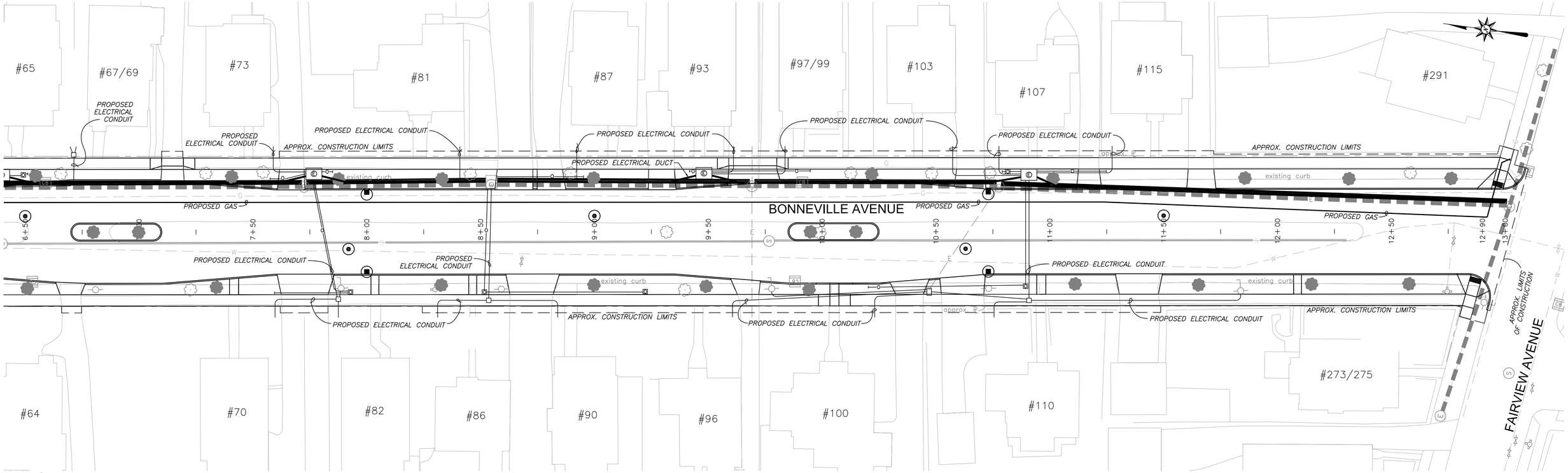

STA. 6+50 TO END

Proposed tree location

O Optical cable

NOTES:

1. THE PROPOSED UTILITY INSTALLATIONS SHOWN ARE TO BE INSTALLED BY THE RESPECTIVE AGENCIES AND ARE NOT PART OF THIS CONTRACT.
2. THE WORK SHOWN IS SCHEDULED TO BE COMPLETED PRIOR TO THE START OF THE WORK RELATED TO THIS CONTRACT.
3. TREE WORK NOTES ARE SHOWN IN ORDER TO COORDINATE WORK AROUND PROPOSED TREE REMOVALS OR NEW TREE PLANTINGS. A SAFE BUFFER ZONE SHALL BE INCORPORATED TO REDUCE THE POTENTIAL OF INJURY TO NEWLY INSTALLED UTILITIES DURING TREE WORK.

BONNEVILLE AVENUE UTILITY INSTALLATION BY OTHERS

CITY OF CHICOPEE ENGINEERING DEPARTMENT
115 BASKIN DRIVE
CHICOPEE, MASSACHUSETTS 01020
(413) 594-3416

DRAWN BY: CJC CHECKED BY: APPROVED BY: SJF	DATE: APRIL, 2015 SCALE: 1" = 20'	DRAWING NUMBER 8

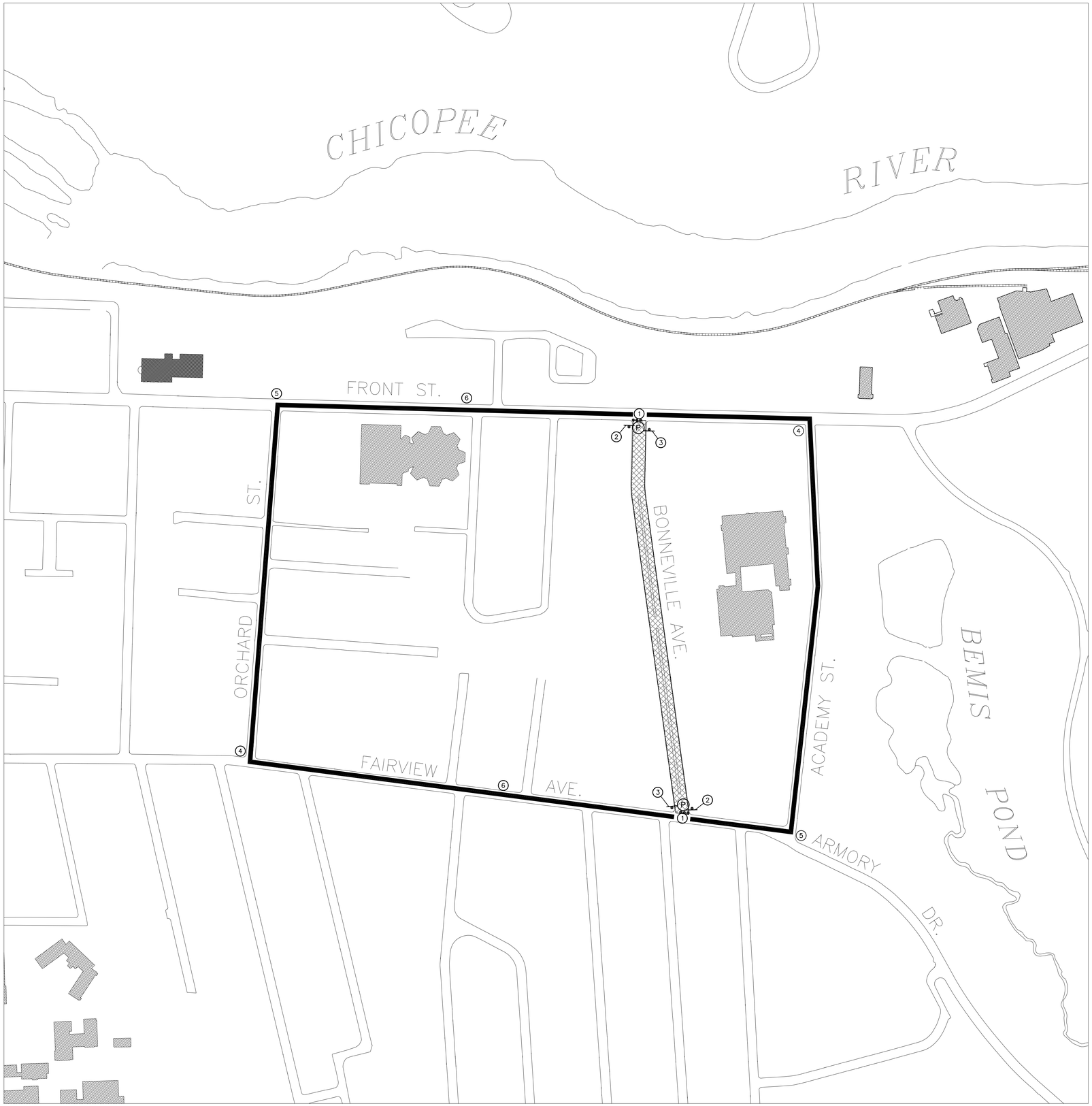

SCALE: 1" = 160'

LEGEND

1

ROAD CLOSED AHEAD
LOCAL TRAFFIC ONLY

(60"x30")
R11-3A
2 EACH

2

ROAD WORK AHEAD

(48"x48")
W20-1
2 EACH

3

END ROAD WORK

(48"x24")
G20-2A
2 EACH

4

DETOUR

(30"x24")
M4-9R
2 EACH

5

DETOUR

(30"x24")
M4-9L
2 EACH

6

DETOUR

(24"x12")
M4-8
2 EACH

WORK ZONE

DETOUR ROUTE

(P) POLICE OFFICER

DRUM W/ FLASHER

SIGN W/ POST

REGULATORY AND GUIDE SIGNS FOR CONSTRUCTION

NOTES:

1. TRAFFIC MANAGEMENT PLAN W/ ROAD CLOSURE SHALL BE IN EFFECT FOR SEWER, DRAIN, AND WATER CONSTRUCTION, FULL-DEPTH EXCAVATION, AND ROAD PAVING OPERATIONS. ROAD CLOSURE WILL NOT INCLUDE SIDEWALK CONSTRUCTION, DRIVEWAY INSTALLATION, OR CURB SETTING.
2. USE OF SIGN 1 AND ANY DRUMS USED IN SETTING UP ROAD CLOSURE SHALL BE SET UP AND REMOVED EACH DAY ALONG WITH RESTORING THE ROAD SURFACE TO AN ACCEPTABLE DRIVING CONDITION.
3. UTILITY CONNECTIONS MADE IN FRONT ST. AND FAIRVIEW AVE. WHICH INVOLVE A LANE SHUT-DOWN SHALL INCLUDE TWO POLICE DETAILS MANAGING AN ALTERNATING ONE-WAY TRAFFIC PATTERN PER THE LATEST EDITION OF THE MUTCD AND MassDOT STANDARD TRAFFIC CONTROL PLANS.
4. ALL SIGNS W/ POSTS SHALL BE IN PLACE BEFORE CONSTRUCTION BEGINS.
5. ALL WARNING SIGNS SHALL BE BLACK LEGEND ON A REFLECTORIZED ORANGE BACKGROUND.

BONNEVILLE AVENUE TRAFFIC CONTROL PLAN

CITY OF CHICOPEE ENGINEERING DEPARTMENT
115 BASKIN DRIVE
CHICOPEE, MASSACHUSETTS 01020
(413) 594-3416

DRAWN BY: CJC CHECKED BY: APPROVED BY: SJF	DATE: APRIL, 2015 SCALE: AS NOTED	DRAWING NUMBER 9

SIGN SUMMARY SCHEDULE

ID NUMBER	SIZE OF SIGN (IN.) WIDTH	SIZE OF SIGN (IN.) HEIGHT	DESCRIPTION	TEXT DIMENSIONS LETTER HEIGHT	TEXT DIMENSIONS VERTICAL SPACING	TEXT DIMENSIONS ARROW RTE. MKR.	NUMBER OF SIGNS REQUIRED	COLOR BACK-GROUND	COLOR LEGEND	COLOR BORDER	POST SIZE AND NO. REQUIRED	AREA IN SQUARE FEET
R1-1	30	30	STOP	SEE MUTCD STANDARDS			1	SEE MUTCD STANDARDS			P9 1	6.25
R4-7	18	24	KEEP RIGHT	SEE MUTCD STANDARDS			8	SEE MUTCD STANDARDS			P9 1	3.00
D3-1	VARIES	9	Bonneville Ave.	6 / 4.5	1.5 1.5		1	GREEN	WHITE	WHITE	P9 1	EACH

GRANITE CURB SCHEDULE

CURB TYPE – VA4	QUANTITY
STRAIGHT	675 LF
4' RADIUS	96 LF

ARCHITECTURAL ACCESS BOARD TOLERANCES

THE CONTRACTOR IS HEREBY NOTIFIED THAT THEY ARE ULTIMATELY RESPONSIBLE FOR CONSTRUCTING ALL PROJECT ELEMENTS IN STRICT COMPLIANCE WITH THE CURRENT AAB RULES, REGULATIONS AND STANDARDS.

ALL CONSTRUCTION ELEMENTS IN THIS PROJECT ASSOCIATED WITH SIDEWALKS, WALKWAYS, WHEELCHAIR RAMPS, AND CURB CUTS ARE CONTROLLED BY 521CMR – RULES AND REGULATIONS OF THE ARCHITECTURAL ACCESS BOARD (AAB).

THE AAB RULES AND REGULATIONS SPECIFY MAXIMUM SLOPES AND MINIMUM DIMENSIONS REQUIRED FOR CONSTRUCTION ACCEPTANCE. THERE IS NO TOLERANCE ALLOWED FOR SLOPES GREATER THAN THE MAXIMUM SLOPE NOR FOR DIMENSIONS LESS THAN THE MINIMUM DIMENSIONS.

CONTRACTORS SHALL ESTABLISH GRADE ELEVATIONS AT ALL WHEELCHAIR RAMP LOCATIONS, AND SHALL SET TRANSITION LENGTHS ACCORDING TO THE APPROPRIATE TABLE IN THE CONSTRUCTION STANDARDS (OR TO THE DETAILS SHOWN ON THE PLANS)

ALL WHEELCHAIR RAMP JOINTS AND TRANSITION SECTIONS WHICH DEFINE GRADE CHANGES SHALL BE FORMED, STAKED, AND CHECKED PRIOR TO PLACING CEMENT CONCRETE. ALL GRADE CHANGES ARE TO BE MADE AT JOINTS.

LOCATION OF THE CURB CUT ALONG A RADIUS AT AN INTERSECTION IS DEPENDENT UPON THE SIZE OF THE RADIUS AND OTHER FIELD CONDITIONS. VERIFY LOCATION WITH ENGINEER PRIOR TO CONSTRUCTION.

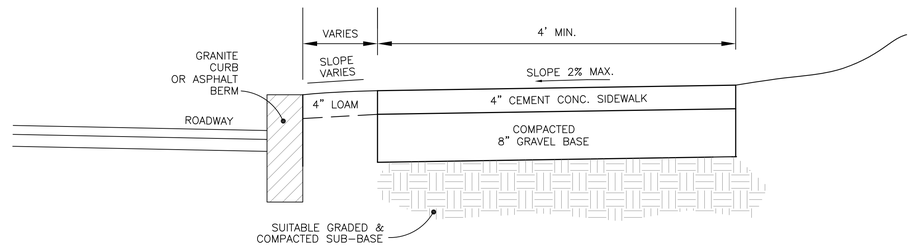

STANDARD SIDEWALK

TYPICAL STREET NAME SIGN

NOTES:

9" ALUMINUM PLANK, ASTM B209, 0.080"
6" UPPERCASE LETTERS, 4.5" LOWERCASE LETTERS
BOTH SIDES 3-M HI-INTENSITY GRADE SHEETING OR IMPROVED EQUAL
P-9 POST REQUIRED FOR INSTALLATION

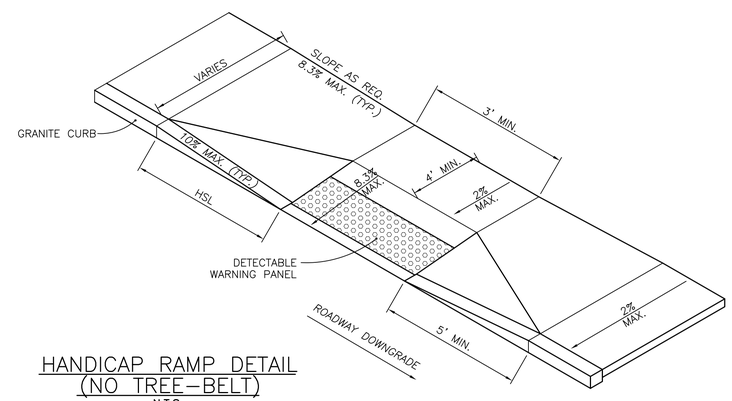

HANDICAP RAMP DETAIL
(NO TREE-BELT)
N.T.S.

GENERAL CONSTRUCTION NOTES:

1. ROADWAY CONSTRUCTION BASELINE RUNS ALONG PROPOSED ROAD CENTERLINE.
2. ALL GRADES REPRESENTED ARE FINISHED TOP COURSE GRADES.
3. THE PAVEMENT CROSS-SECTION FOR BONNEVILLE AVENUE SHALL BE (1) 2.5" COURSE OF BINDER AND (1) 2" (1/2" MODIFIED) TOP COURSE FOR A TOTAL OF 4.5" PAVEMENT THICKNESS OVER 12" PROCESSED GRAVEL (See Detail Sheets for cross-sections).
4. REMOVE AND RESET ALL GRANITE CURB AS NOTED ON SHEET 1. THE PROPOSED TRAFFIC ISLANDS, DRIVEWAY APRON CURB TRANSITIONS, AND TREE PIT SHALL BE OUTFITTED WITH NEW GRANITE CURB (SEE SCHEDULE ABOVE).
5. ALL DRIVEWAY APRONS SHALL BE CONSTRUCTED WITH CEMENT CONCRETE UNLESS OTHERWISE NOTED.
6. THE SEWER MAIN SHALL BE REMOVED DURING THE INSTALLATION OF THE DRAIN MAIN WHERE THE EXISTING SEWER MAIN SHARES THE TRENCH. THE PIPE ENDS SHALL BE PLUGGED WITH BRICK & MORTAR IN LOCATIONS WHERE THE EXISTING SEWER MAIN IS TO BE ABANDONED.
7. ALL EXISTING SEWER LATERALS SHALL BE RECONNECTED TO THE NEW SEWER MAIN WITH A WYE AND 6" PVC PIPE. ANY 45° BENDS SHALL BE INSTALLED USING A SWEEP. LOCATIONS OF EXISTING SEWER LATERALS ARE TO BE DETERMINED IN THE FIELD AND MUST BE LOCATED BY THE CONTRACTOR PRIOR TO CONSTRUCTION (INCLUDED IN ITEM 250.99). ADDITIONALLY, THE TEST PIT ITEM (ITEM 141.) MAY BE USED WITH THE ENGINEER'S APPROVAL.
8. ALL NEW SEWER LATERAL CONNECTIONS SHALL BE LAID TO A LOCATION BEHIND THE SIDEWALK WHERE POSSIBLE, AND SHALL INCLUDE A CLEANOUT AS SHOWN ON SHEET D-2.
9. DRAIN SERVICE STUBS SHALL BE INSTALLED TO THE PROPERTY LINE AND CAPPED FOR FUTURE USE AT SELECT PROPERTIES. THE ENGINEER WILL NOTIFY THE CONTRACTOR OF THE PARTICIPATING PROPERTIES PRIOR TO CONSTRUCTION.
10. PROPOSED GRADES OF NEW CATCH BASIN LATERALS ARE APPROXIMATE AND MAY REQUIRE FIELD ADJUSTMENT DUE TO EXISTING UNDERGROUND UTILITIES.
11. REMOVAL OF EXISTING CATCH BASINS (WHERE LABELED) SHALL INCLUDE THE PLUGGING OF ALL ABANDONED LATERAL PIPES W/ BRICK AND MORTAR. COMPACT BACKFILL IN SIX INCH LIFTS.
12. ALL PROPOSED STRUCTURE COVERS AND GRATES SHALL BE BE INSTALLED AT BINDER GRADE. TOP COURSE PAVEMENT (AT THE DISCRETION OF THE OWNER) MAY BE INSTALLED IN THE SPRING OF THE FOLLOWING YEAR AT WHICH TIME THE STRUCTURE COVERS AND GRATES WILL BE ADJUSTED TO FINISHED GRADE.
13. ALL CASTINGS REMOVED SHALL BE DELIVERED TO THE CHICOPEE DPW YARD.
14. ALL EXISITNG REGULATORY SIGNS SHALL BE REMOVED AND STACKED IF EXISTING LOCATION IS IN CONFLICT WITH CONSTRUCTION PROCEDURES. SEE SHEET 6 FOR LOCATIONS OF NEW SIGNS TO BE INSTALLED.
15. LOCATION OF UTILITIES IS APPROXIMATE. CONTACT DIGSAFE.

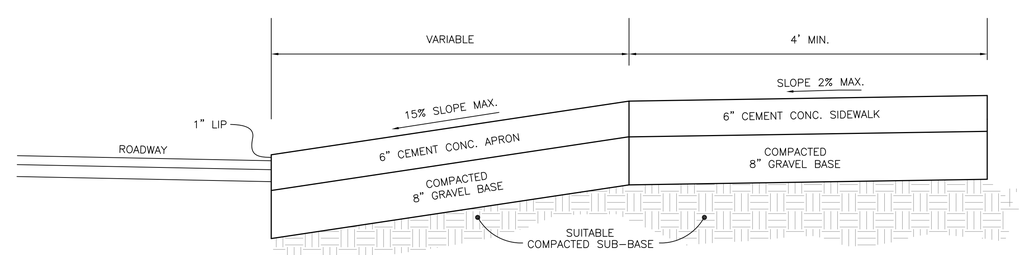

SIDEWALK W/ CEMENT CONC. APRON

CONSTRUCTION NOTES, DETAILS, AND SCHEDULES	CITY OF CHICOPEE ENGINEERING DEPARTMENT 115 BASKIN DRIVE CHICOPEE, MASSACHUSETTS 01020 (413) 594-3416		
	DRAWN BY: CJC CHECKED BY: APPROVED BY: SJF	DATE: APRIL, 2015 SCALE: N.T.S.	DRAWING NUMBER D-1

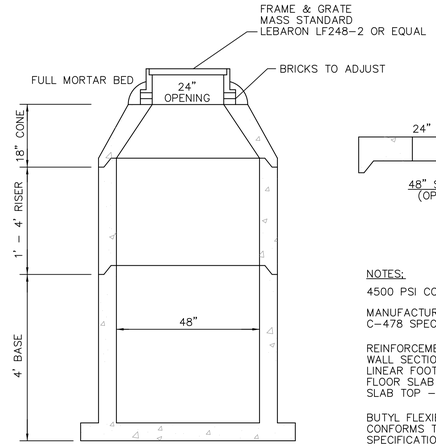

NOTES:

4500 PSI CONCRETE

MANUFACTURED TO LATEST ASTM C-478 SPECIFICATIONS

REINFORCEMENT
WALL SECTIONS – 0.12 SQ. IN. PER LINEAR FOOT
FLOOR SLAB – 0.12 SQ. IN. EACH WAY
SLAB TOP – AASHTO HS20-44

BUTYL FLEXIBLE JOINT SEALANT CONFORMS TO LATEST ASTM C-990 SPECIFICATIONS

CATCH BASIN SHALL HAVE A 4' SUMP

TYPICAL PRECAST CONCRETE
CATCH BASIN

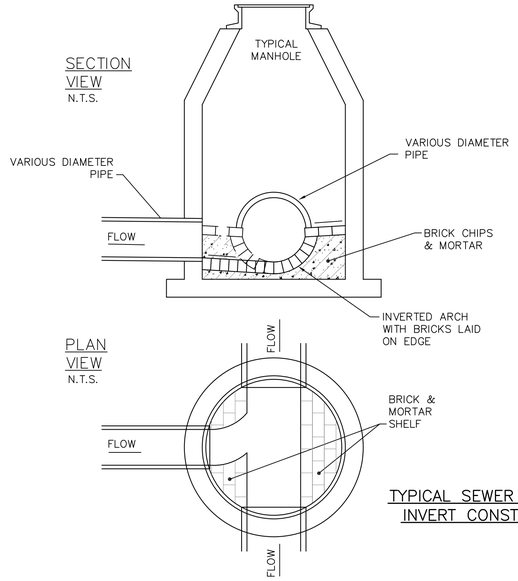

TYPICAL SEWER MANHOLE
INVERT CONSTRUCTION

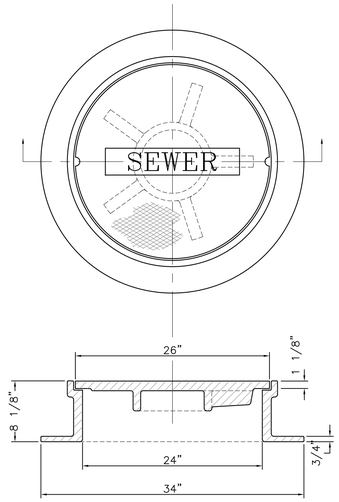

CAST IRON
FRAME & COVER

NOTES:

FRAME AND COVER SHALL BE EJ 2112Z 2110A1 Set OR EQUAL.

DRAIN MANHOLE COVER SHALL HAVE "DRAIN" CAST INTO LID.

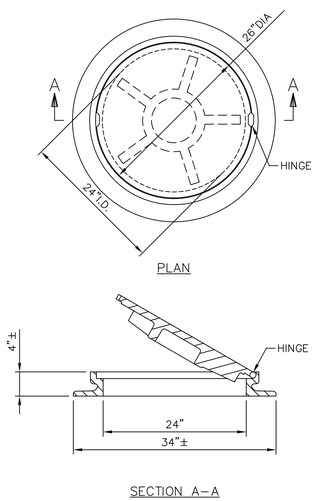

NOTES:

1. FRAME AND COVER ARE MANUFACTURED FROM DUCTILE IRON.
2. LETTERING IS CAST INTO COVERS AS SPECIFIED.

DUCTILE IRON
MANHOLE FRAME & COVER

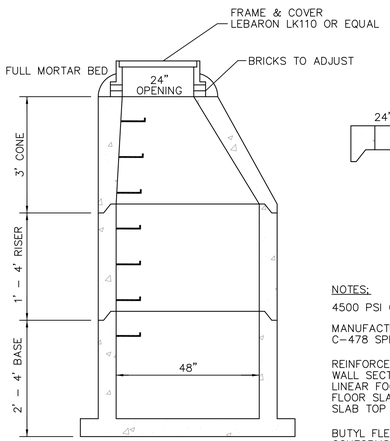

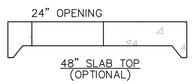

NOTES:

4500 PSI CONCRETE

MANUFACTURED TO LATEST ASTM C-478 SPECIFICATIONS

REINFORCEMENT
WALL SECTIONS – 0.12 SQ. IN. PER LINEAR FOOT
FLOOR SLAB – 0.12 SQ. IN. EACH WAY
SLAB TOP – AASHTO HS20-44

BUTYL FLEXIBLE JOINT SEALANT CONFORMS TO LATEST ASTM C-990 SPECIFICATIONS

MANHOLE STEPS – STEEL REINFORCED COPOLYMER POLYPROPYLENE PLASTIC

TYPICAL PRECAST CONCRETE
MANHOLE

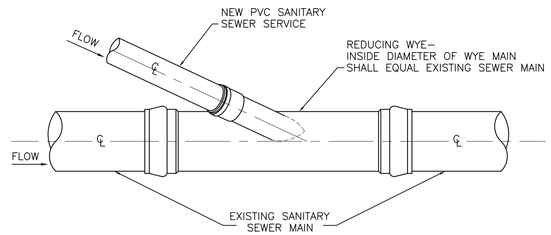

PROFILE
N.T.S.

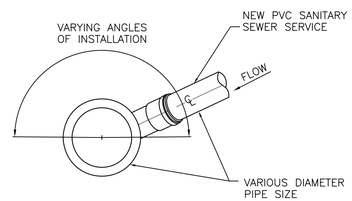

SECTION
N.T.S.

NOTE:

EXISTING SANITARY SEWER MAIN SHALL BE SAW-CUT AND REDUCING WYE SHALL BE INSTALLED AT THE PROPER ANGLE TO ALLOW 2% OR GREATER SLOPE TO THE NEW SANITARY SEWER SERVICE PIPE.

SANITARY SERVICE CONNECTION
TO SEWER MAIN W/ WYE

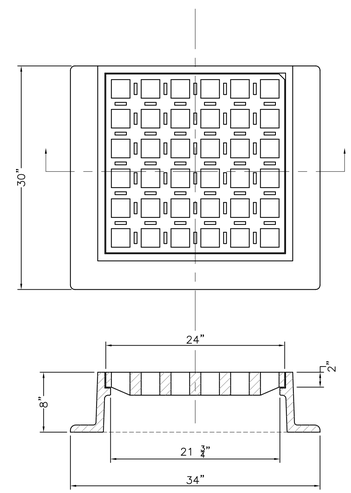

CAST IRON
FRAME & GRATE

NOTE:

FRAME AND GRATE SHALL BE EJ 5524 Frame AND 5520M5 Grate OR EQUAL.

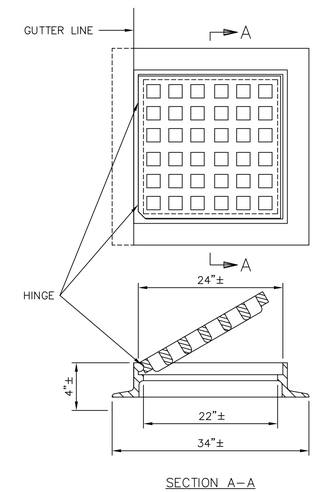

NOTE:

MATERIAL – DUCTILE IRON, SEE SPECIFICATIONS

DUCTILE IRON
CATCH BASIN FRAME & GRATE

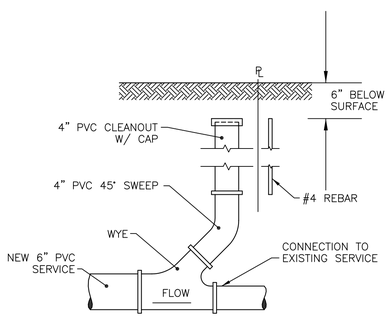

NOTES:

MINIMUM PITCH FOR SERVICE LATERALS IS 1/4" / FT.

PROVIDE REDUCERS AND COUPLINGS AS NEEDED TO CONNECT TO EXISTING SERVICE.

WHERE THE SIDEWALK IS AT THE PROPERTY LINE, THE CLEANOUT SHALL BE PLACED BEYOND THE SIDEWALK ON THE PRIVATE PROPERTY SIDE.

SANITARY SERVICE CONNECTION
W/ CLEANOUT

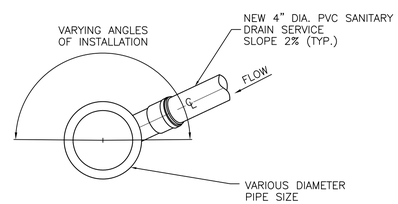

SECTION
N.T.S.

DRAIN SERVICE CONNECTION
TO STORM SEWER MAIN W/ WYE

NOTE:

EXISTING STORM SEWER MAIN SHALL BE SAWCUT AND REDUCING WYE SHALL BE INSTALLED AT PROPER ANGLE TO ALLOW 2% (TYP.) SLOPE.

NEW DRAIN SERVICE SHALL BE INSTALLED TO THE PROPERTY LINE AND CAPPED FOR FUTURE CONNECTION BY OTHERS.

LOCATIONS FOR DRAIN SERVICE INSTALLATION SHALL BE DETERMINED BY THE OWNER.

CONSTRUCTION DETAILS

CITY OF CHICOPEE ENGINEERING DEPARTMENT
115 BASKIN DRIVE
CHICOPEE, MASSACHUSETTS 01020
(413) 594-3416

DRAWN BY: CJC CHECKED BY: APPROVED BY: SJF	DATE: APRIL, 2015 SCALE: N.T.S.	DRAWING NUMBER D-2

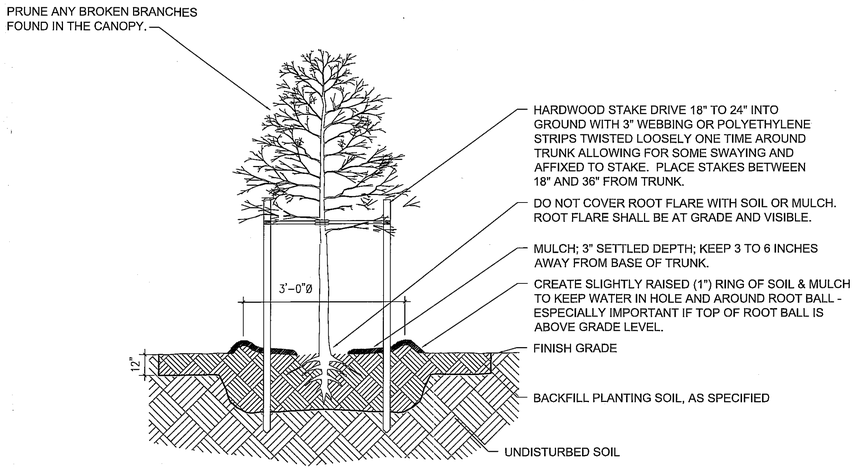

1 BARE ROOT PLANTING DETAIL

Bonneville Avenue Plant List

CODE	QTY	LATIN	COMMON	SIZE	ROOT	NOTES
Cc(BB)	2	Cercis canadensis	Eastern Redbud	6' – 8'	B & B	multi–stem
LsW(BB)	8	Liquidambar styraciflua 'Ward' ~ Cherokee	Cherokee Sweetgum	1.75"–2" cal.	B & B	
MSS	4	Malus 'Spring Snow'	Spring Snow Crabapple	1.75"–2" cal.	Bare Root	
PxA(BB)	4	Platanus x acerifolia 'Bloodgood'	Bloodgood London Planetree	2.5"–3" cal.	B & B	
PxA	3	Platanus x acerifolia 'Bloodgood'	Bloodgood London Planetree	1.75"–2" cal.	Bare Root	
PhS	3	Prunus x hillieri 'Spire'	Spire Cherry	1.75"–2" cal.	Bare Root	
PsC	12	Prunus sargentii 'Columnaris'	Sargent Cherry	1.75"–2" cal.	Bare Root	
UxP(BB)	4	Ulmus x 'Patriot'	Patriot Hybrid Elm	2.5"–3" cal.	B & B	
UxP	7	Ulmus x 'Patriot'	Patriot Hybrid Elm	1.75"–2" cal.	Bare Root	
UxPr	2	Ulmus x 'Prospector'	Prospector Hybrid Elm	1.75"–2" cal.	Bare Root	
LMB	1260	Liriope muscari 'Big Blue'	Big Blue Lilyturf	6" – 10"	no. 1 container	12" on center

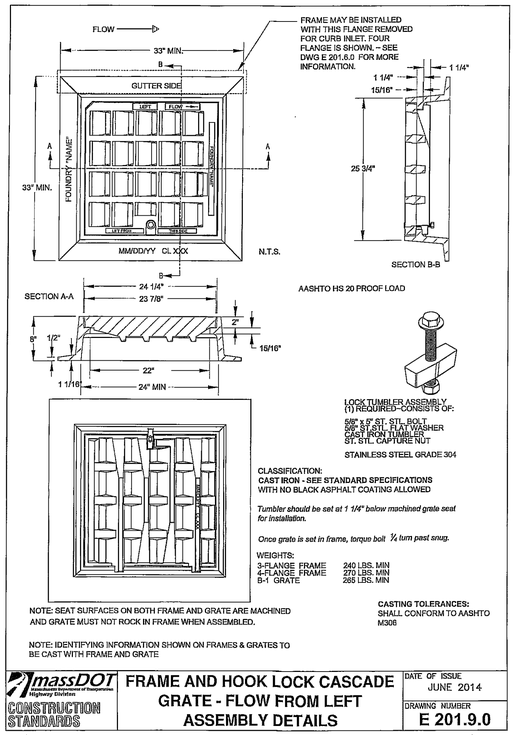

massDOT Highway Division — CONSTRUCTION STANDARDS

FRAME AND HOOK LOCK CASCADE GRATE - FLOW FROM LEFT ASSEMBLY DETAILS

DATE OF ISSUE: JUNE 2014

DRAWING NUMBER: E 201.9.0

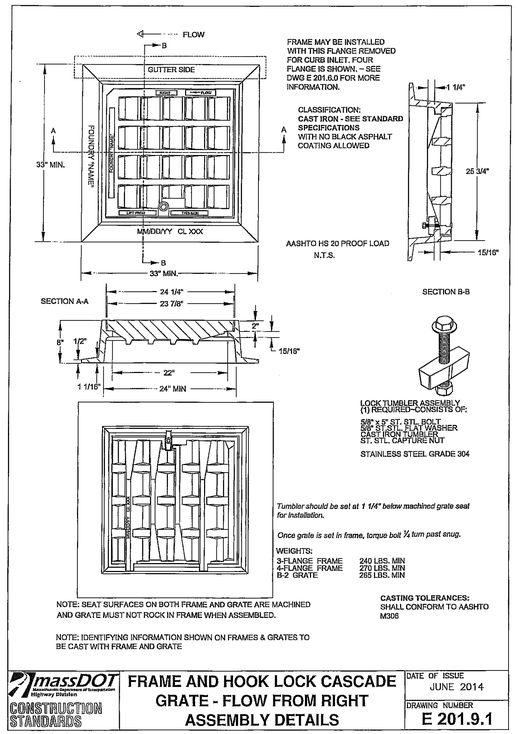

massDOT Highway Division — CONSTRUCTION STANDARDS

FRAME AND HOOK LOCK CASCADE GRATE - FLOW FROM RIGHT ASSEMBLY DETAILS

DATE OF ISSUE: JUNE 2014

DRAWING NUMBER: E 201.9.1

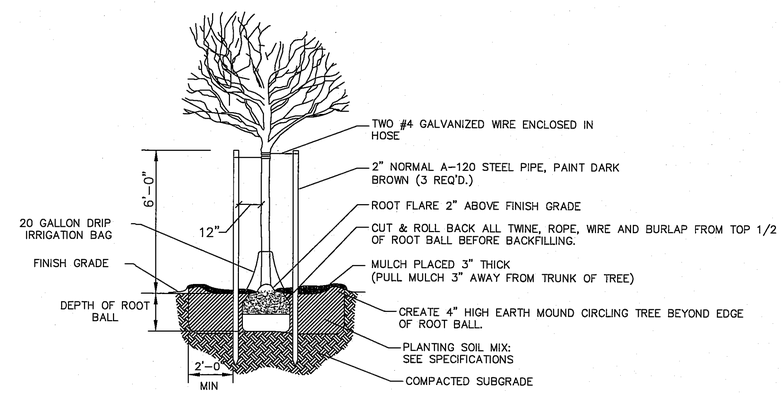

DECIDUOUS B & B TREE PLANTING

PLANTING & DRAINAGE DETAILS

CITY OF CHICOPEE ENGINEERING DEPARTMENT
115 BASKIN DRIVE
CHICOPEE, MASSACHUSETTS 01020
(413) 594–3416

DRAWN BY: CJC
CHECKED BY:
APPROVED BY: SJF

DATE: APRIL, 2015
SCALE: N.T.S.

DRAWING NUMBER: D–3

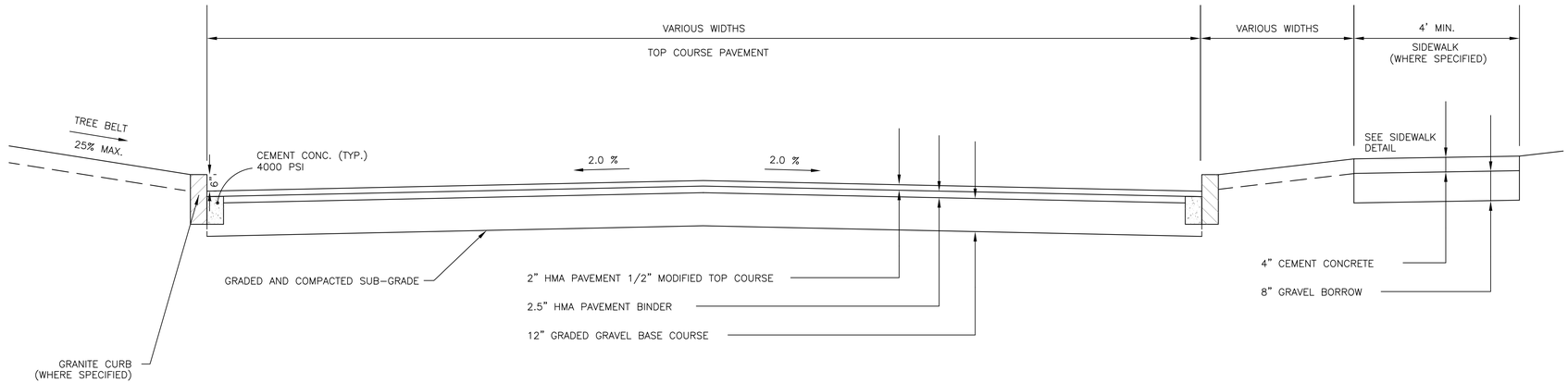

TYPICAL ROADWAY RECONSTRUCTION CROSS SECTION
FULL-DEPTH EXCAVATION

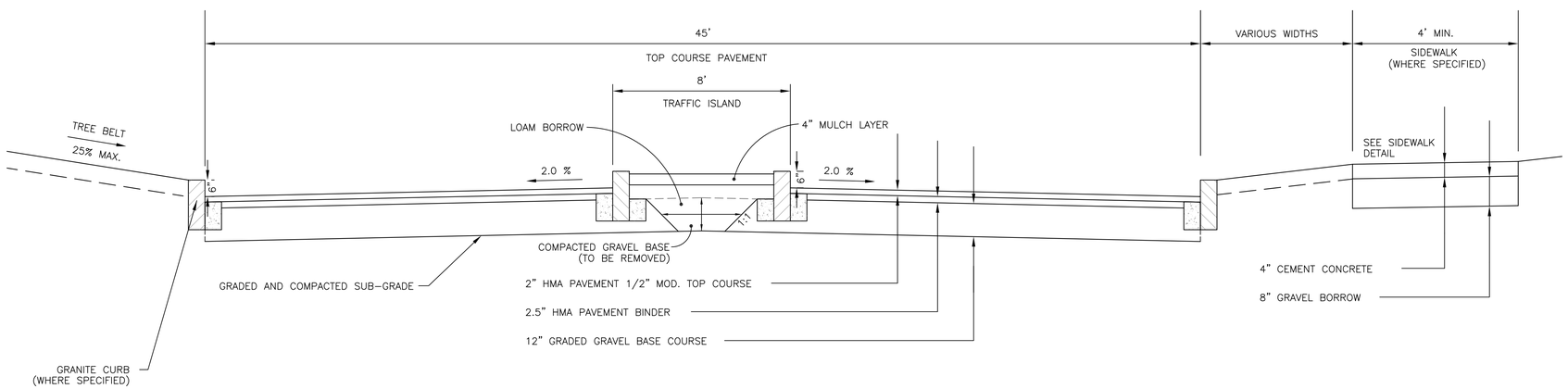

TYPICAL BONNEVILLE AVE. RECONSTRUCTION CROSS SECTION
FULL-DEPTH EXCAVATION @ TRAFFIC ISLAND

NOTE:

* SUB-GRADE AND GRAVEL BASE COURSE SHALL BE GRADED AND COMPACTED WITHOUT REGARD TO THE POSITION OF THE PROPOSED TRAFFIC ISLANDS. THE ISLANDS SHALL THEN BE LAID OUT FOLLOWED BY THE INSTALLATION OF THE BINDER COURSE. FOLLOWING BINDER PAVING, THE NEW GRANITE CURB SHALL BE INSTALLED AT THE PROPOSED TRAFFIC ISLANDS WITH A CEMENT CONCRETE KEY-WAY ON BOTH SIDES OF THE CURB (CONCRETE SUPPORT IS CONSIDERED INCIDENTAL TO ITEMS 504. & 504.1). PRIOR TO THE BACKFILL WITH LOAM BORROW IN THE INTERIOR OF THE ISLANDS, THE GRAVEL BASE COURSE SHALL BE REMOVED TO A THE DEPTH OF THE SUB-GRADE AS SHOWN IN THE CROSS-SECTION DRAWING.

THE ISLANDS SHALL BE BACKFILLED WITH LOAM BORROW AND TOP-DRESSED WITH A 4" THICK LAYER OF MULCH. THE FINISHED GRADE OF THE MULCH SHALL BE 1" – 1.5" LOWER THAN THE TOP OF CURB GRADE.

TYPICAL CROSS-SECTIONS	CITY OF CHICOPEE ENGINEERING DEPARTMENT 115 BASKIN DRIVE CHICOPEE, MASSACHUSETTS 01020 (413) 594-3416		
	DRAWN BY: CJC CHECKED BY: APPROVED BY: SJF	DATE: APRIL, 2015 SCALE: N.T.S.	DRAWING NUMBER D-4